SANY®

SPECIFICATION

700t

90.1m

SAC7000S

SANY ALL TERRAIN CRANE

QUALITY CHANGES THE WORLD

crane.sanyglobal.com

V1.0

It is one of the core business units in SANY Group, specializing in the development and manufacturing of high-end wheel cranes, crawler cranes and tower cranes, including the complete range of wheel cranes from 8 to 2200t, crawler cranes from 25 to 4500t and tower cranes from 6 to 185t.

SANY CRANE

SANY
SANY
SANY

Strong lifting capacity

Full-extension boom length of 90.1m, fixed jib of 50m, and luffing jib of 90m.
Equipped with Y-shape superlift device, the lifting capacity of long boom is more than doubled.
Adopt SACT adjustable counterweight technology with 3 counterweight positions. The maximum displacement of 2m can reduce 20t counterweight which need to be carried.
With a variety of configurations such as light duty wind power jib and heavy duty wind power jib, it has ever stronger lifting capacities and is suitable for 1.5MW-2.5MW wind power maintenance.

Excellent driving performance

Innovative seven-axle chassis, all-wheel steering and four-axle drive, and a variety of steering and drive modes bring strong driving flexibility.
The new intelligent multi-mode hydro-pneumatic suspension functions real-time vehicle attitude monitoring, active lifting and variable damping adaptation, etc., making driving more comfortable and stable.
With a strong power and transmission system equipped with hydraulic torque converter, hydraulic retarder and eddy current retarder, the driving safety and smoothness are greatly improved.
Jobsite transfer speed is greatly improved, the transfer speed with boom and outriggers reaches 50 km/h, with a height of 4.2m with the superlift device, it can pass through 90% of the bridges and tunnels of class III and IV highways without dismantling the superlift device.

SAC7000S

SANY ALL TERRAIN CRANE
700 TON LIFTING CAPACITY

High efficiency and reliability

Multi-pump and multi-circuit hydraulic system, electric proportional and multi-level pressure control to realize speed grading and inching-mobility, achieving better performance.

The new superlift stable tensioning control technology, one click auto tensioning and swing away/back, improves the operation efficiency by 20% and the lifting performance of medium and long boom by 5%~10%.

Less operational constraints, H-shape outriggers, three outrigger-span combinations, three counterweight slewing radii 6.8m, 7.8m, 8.8m for high site adaptability.

High level safety

The multifunctional wireless remote control system facilitates crane operation, and the safety protection program and fault diagnosis system make the operation safe and reliable.

The anti-tipping early-warning system gives early warning through audible and visual prompt to ensure the operation safety of vehicles.

The load moment indicator system with high precision, high stability and high intelligence is adopted to protect the lifting operation in an all-round way.

Equipped with adequate sensors for timely data feedback, real-time monitoring, and mastering the working state of the vehicle at any time.

Overall Dimensions

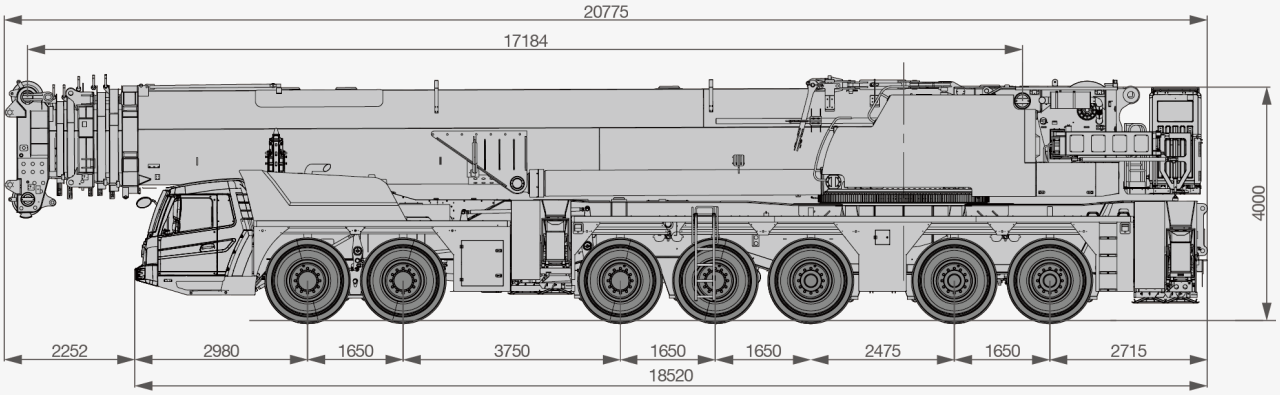

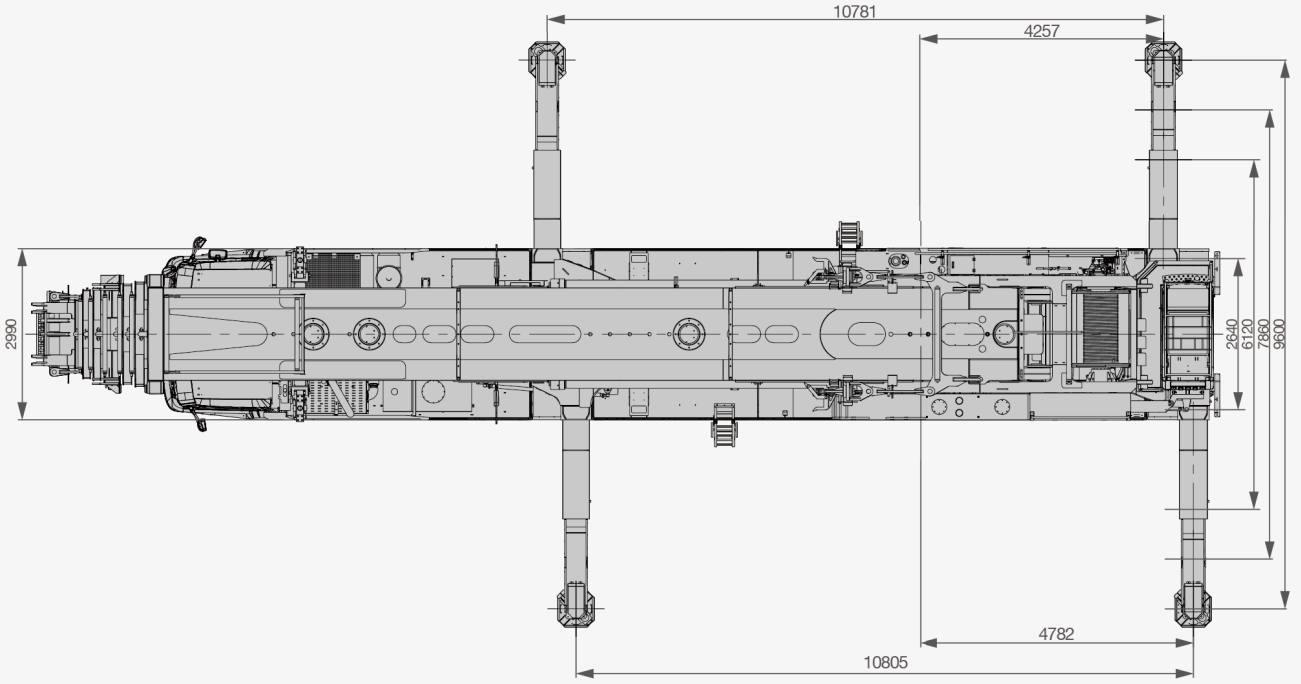

Technical Specification

CATEGORY	ITEM		UNIT	VALUE
CAPACITY	Max. lifting capacity		t	700
DIMENSIONS	Overall length		mm	19395
	Overall width		mm	3000
	Overall height		mm	4000
	Axle base	axle 1 and axle 2	mm	1650
		axle 2 and axle 3	mm	3750
		axle 3 and axle 4	mm	1650
		axle 4 and axle 5	mm	1650
		axle 5 and axle 6	mm	2475
		axle 6 and axle 7	mm	1650
WEIGHT	Total mass of the vehicle (Type approval)		kg	84000
POWER	Rated power (chassis)		kW/rpm	480/1800
	Rated torque (chassis)		N.m/rpm	3000/1300
	Rated power (superstructure)		kW/rpm	205/2200
	Rated torque (superstructure)		N.m/rpm	1100/1400
TRAVEL	Max. travel speed		km/h	70
	Steering radius		m	14
	Wheel formula		-	14×8
	Minimum ground clearance		mm	318
	Approach angle		°	14
	Departure angle		°	12
	Max. gradeability		-	34%
MAIN PERFORMANCE	Working temperature range		℃	–20~+40
	Min. working radius		m	3
	Full counterweight		t	163
	Number of boom sections		-	7
	Boom shape		-	U-shape boom
	Boom length	Basic boom	m	17.2
		Full extension boom	m	90 .1
	Outrigger span		m	9.6×10.8
	Jib offset		°	0/20/40
OPERATION SPEED	Max. lifting speed of single rope of main hoist		m/min	130
	Full-extension/retraction boom time of main boom		s	1200/1200
	Full luffing up/down time of boom		s	95/95
	Slewing speed		r/min	0.9
AIR CONDITIONER	in operator's cab		-	Cooling and heating
	in driver's cab		-	Cooling and heating

Crane Introduction

Carrier

Driver's cab

- The cab is a new type of steel structure independently developed by SANY, with excellent shock absorption and sealing performance. With outward opening doors on both sides, the cab is equipped with driver's seat and passenger's seat with pneumatic suspension, adjustable steering wheel, large-field rearview mirrors, comfortable driver's seat with headrest, anti-fog fan, heating and cooling A/C, and stereo radio, etc., as well as complete control instruments and meters, so that is the driving will be more comfortable, safer, and more user-friendly.

Carrier frame

- Designed and manufactured by SANY, the torsion-resistant box-type structure with optimized structure and low weight is welded by fine-grained high-strength steel plates. The outriggers are retracted in special fixed boxes, which are located between axle 2 and axle 3 and at the carrier frame tail, and equipped with front and rear towing devices.

Chassis engine

- Model: Mercedes-Benz OM502LA, electronically controlled, V8, watercooled, supercharged intercooled, electronic injection diesel engine.
- Power: 480kW / 1800rpm.
- Torque: 3000N·m / 1300rpm.
- Emission standard: complying with EU Stage III B.
- Fuel reservoir capacity: approx. 600L.

Transmission

- 12-speed AMT with a large speed ratio range, which can not only realize the low-speed slope climbing, but also high-speed driving.

Axle

- Imported from Kessler, Germany, with all axle steered, and axles 1-4 are drive axles. Axles 1-3 adopt hydraulic power steering system with linkage feedback, and axles 4-7 adopt electrohydraulic control steering, with assist for speed control and selectable special steering mode, for easy steering and flexible operation.

Suspension system

- The axle suspension is hydro-pneumatic suspension adjustable for height with hydraulic lock, which can realize five modes: suspension, rigid locking, automatic leveling, vehicle lifting and single point lifting. It provides good steering ability, so that the vehicle can apply to various harsh working conditions and roads, ensuring the smoothness and lateral stability of the vehicle, as well as driving comfort.

Steering

- Servo power steering gear, dual-circuit system hydraulic steering device, with emergency steering pump, and the steering strategy is adjusted according to the speed.
- There are six steering modes: 1) On -road driving mode (default mode); 2) All wheel steering mode; 3) Crabbing mode; 4) Yaw free steering mode; 5) Independent rear axle steering mode; 6) Rear axle locked steering mode.

Tires

- 14 Bridgestone heavy-duty tires - 16.00R25 (445/95 R25).

Drive/Steering

- 14 × 8.

Brake

- Dual-circuit and air-braking brake.
- Service brake: all wheels use air servo brakes and dual-circuit braking system.
- Parking brake: acting on axle 2 to axle 7.
- Auxiliary brake: the engine is equipped with engine brake, exhaust brake and transmission hydraulic retarder brake.

Outrigger

- H-type two-stage telescopic outriggers. The telescopic hydraulic system of outrigger adopts electric proportional control technology and is equipped with wireless remote control with high control precision and easy operation, which can display the load borne on the outrigger control panel, and has the function of automatic leveling.

Electrical system

- 24 V DC power supply. Chassis power supply can be cut off; equipped with auto lighting system; actions of the vehicle such as throttle and outrigger control are realized by electrical control with easy and fast operation; the electrical system has strong detection, logic, operation and other capabilities, and has the functions of fault diagnosis, centralized display and self-protection.
- The chassis adopts CAN bus system, which is provided with: fast, stable and accurate data transmission; multi-functional centralized display system; high protection grade of IP65; low power consumption with a maximum of 5W; with four function keys provided in the user interface; LCD is used for display adjustable for contrast.

Crane Introduction

Operator's cab

- It adopts a stamping forming all-welded structure, it is provided with safety glass with sunshade, outward opening doors, and control joysticks installed on the vehicle operation panel, which conforms to the ergonomic concept; corrosion resistant FRP reinforced composite structure, full coverage softened interior, panoramic sunroof, tilt positioning of operator seat back and other human centered design make the operation comfortable and easy; touch screen with adjustable viewing angle, multi-screen and multi-angle monitoring to ensure operation safety and realize one-touch operation; the main boom, luffing jib and superlift hoist are equipped with monitors for centralized monitoring in key areas; perfect combination of main console and operation display system enables quick and easy human-computer interaction; the operator's cab can be tilted upward by 20° for high-altitude operation observation; heating and cooling A/C is provided.

Superstructure engine

- Model: Mercedes-Benz, electronically controlled, in-line six-cylinder, water-cooled, supercharged intercooled and diesel engine.
- Power: 205kW/2,200rpm.
- Torque: 1,100Nm/1,200-1,600rpm.
- Emission standard: complying with EU Stage III A.
- Fuel reservoir capacity: 350L.

Boom system

- Main boom: It is composed of 1 base boom and 7 telescopic sections. It is made of fine-grained high-strength steel plates by bending and welding, with a elliptical section, it has good buckling resistance; the single cylinder automatic latch system is adopted, and a double-acting cylinder can control the extension and retraction of all booms to achieve a combination of multiple boom lengths; the basic boom length is 17.2m and the full-extension boom length is 90.1m.
- Jib: There are fixed jib and luffing jib: the fixed jib and luffing jib share the adapter, jib head, 6m and 12m large (small) section standard sections, which can realize the combination of jib length combination of 20m~50m. The offset can be changed according to the actual needs of working conditions to improve the automation level, reduce the labor intensity and improve the work efficiency. The luffing jib can realize the length combinations of 24 m~90 m, which greatly improves the lifting capacity and tip height.
- Superlift device: It's arranged on the left and right sides of the head of the base boom, and independent from each other, and it can realize assembly and disassembly without auxiliary crane. The superlift device can greatly improve the stress state of the boom, avoid side bending and reduce the downward deflection deformation of the boom, so that the deflection in the long boom state can be reduced by 20%-30% and the lifting capacity can be improved by more than 200%.

Slewing system

- It is composed of constant displacement motor and slewing reducer with mature technology and widely used on wheel cranes, at the same time, it adopts external meshing with slewing bearing to realize 360° full-slewing and stepless speed regulation; the slewing hydraulic system adopts a closed system, which can not only avoid the throttling loss of the open system, but also make the system have high efficiency; electric proportional brake pedal is used to realize emergency braking.

Turntable

- Designed and manufactured by SANY, the turntable made by fine-grained high-strength steel has a better structure.

Counterweight

- Combined variable counterweight. Multiple combination modes ranging 0 t-163 t can meet the needs of different working conditions, maximize the performance of structural parts, achieve remote removal and installation, and a good inching-movement.

Hook

S/N	Lifting capacity (t)	Number of sheaves	Rope rate	Weight (kg)	Remark
1 (Optional)	200	9	19	2440	Counterweight can be added
2	160	7	15	1839	Counterweight can be added
3	80	3	7	679	Counterweight can be added
4 (Optional)	32	1	3	505	Counterweight can be added
5(Optional)	12.5	0	1	266	Ball hook

Crane Introduction

Hydraulic system

- The open and closed independent hydraulic system of the superstructure has the characteristics of high load sensitivity, heavy load low speed, low load high speed and high action efficiency. The luffing and telescopic system adopts an open system composed of an electro proportional pump and a self-made main valve, which has four pressure levels for selection, and different pressure levels are used for different actions, combined with the displacement of the electric proportional pump, so as to realize energy-saving and safe luffing and telescopic actions; the hoist system adopts a closed system to avoid the throttling loss of open system, so that the system has high efficiency and wide speed regulation range; the slewing system is a closed system, which can avoid the throttling loss of open system, so that the system has high efficiency and good inching-movement performance; in addition to the functions of superstructure slewing, boom luffing, extension and retraction, and main and auxiliary hoist lifting, it can also realize the functions of counterweight lifting, operator's cab rotation, and turntable locking.
- The main oil pump, rotary pump, hoist motor and balanced valve adopt high-quality components with high reliability; the electric proportional variable displacement piston pump can adjust the displacement of the oil pump in real time, realizing high-precision flow control and minimize energy waste; the dual-pump converging/shunting main valve independently developed by SANY has high converging efficiency of single action dual-pump and high shunting controllability of combined action dual-pump.
- The hydraulic system with passive luffing down compensation is adopted, which has good luffing down inching-movement and stability.
- The main boom adopts a single cylinder pin telescopic system.

Hoist

- Main hoist: Planetary gear reducer driven by hydraulic motor and special rope groove winch drum, with a built-in brake.
- Wire rope lock: The end of the wire rope is cast and directly installed in the lock sleeve, which improves the reeving speed.
- Specification of wire rope: ϕ 24-2160, non-rotating wire rope.
- Max. single rope speed: approx. 130m/min.

Luffing system

- Double cylinders are adopted, the hydraulic system adopts dual-pump converging open hydraulic circuit, and the combination of electric proportional control, active luffing and passive luffing down can realize large angle fast luffing and small angle stable slow luffing.

Control system

- Powered by 24 V DC, it adopts PLC integrated programmable controller, CAN-BUS control network, and combines with conventional electrical to realize the logic control and electrical proportional control functions of the system.
- It has the functions of system real-time monitoring and automatic fault diagnosis.
- Lifting, slewing and luffing are controlled by two auto resettable multi-directional electric proportional joystick; the extension and retraction are controlled by pedal; counterweight lifting, operator's cab displacement and turntable locking are all controlled by keys on the control panel.
- The display is connected with the controller by CAN bus, and its main functions include digital adjustment and display of electric proportional control parameters, fault code display of electric proportional system and real-time detection data display of hydraulic system.

Safety equipment

- A method of analytical mechanics is adopted and a load moment indicator calculation system based on the lifting mechanics model is established. Through online empty-load calibration, the lifting accuracy can reach ±3%.
- The hydraulic system is equipped with hydraulic balance valve, relief valve, two-way hydraulic lock, etc. to realize the stability and reliability of the hydraulic system.
- The boom and luffing jib hoists are equipped with 3rd wrap indicators to prevent over-hoist-down of the wire rope.
- The boom head and jib head are equipped with A2B switch to prevent the wire rope from over winding.
- The boom head is equipped with an anemometer to detect whether the wind speed exceeds the allowable range.
- Superlift device retracting and releasing rope tension protection, luffing (fixed) jib installation and lifting protection.

Jib Assembly

Fixed Jib Assembly (Standard)

F-15m

F-20m

F-21m 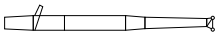

F-26m 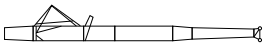

F-27m 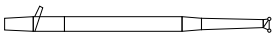

F-32m

F-33m

F-38m 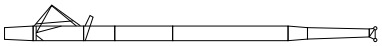

F-39m 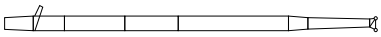

F-44m 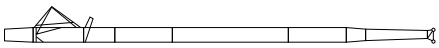

F-45m 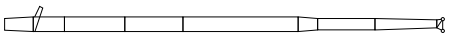

F-50m 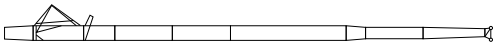

F-39m

F-45m

F-51m

Fixed Jib Assembly (Optional)

F-56m 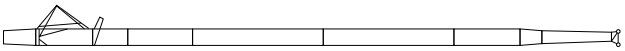

F-62m 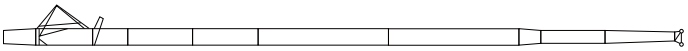

F-57m 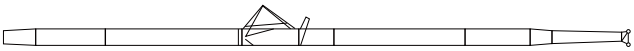

F-63m 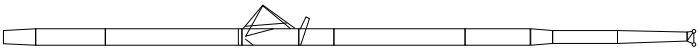

Jib Assembly

Heavy-duty Wind Power Jib (Optional)

48m

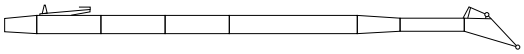

42m

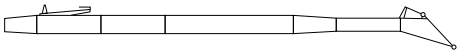

36m

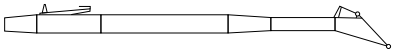

30m

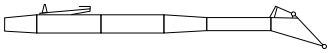

Light-duty Wind Power Jib (Optional)

14m

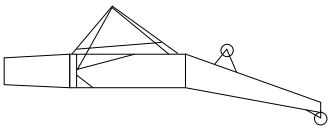

Luffing Jib Assembly (Optional)

L24m

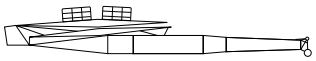

L30m

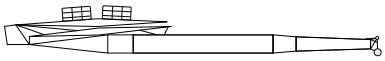

L36m

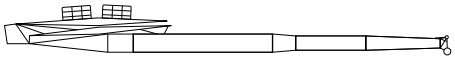

L42m

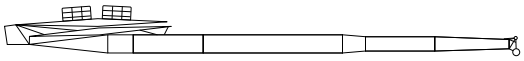

L48m

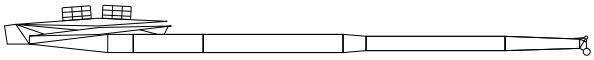

L54m

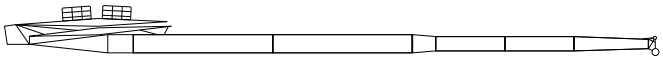

L60m

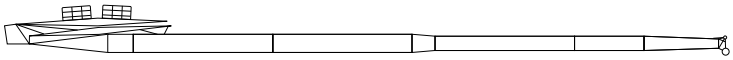

L66m

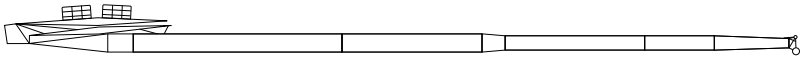

L72m

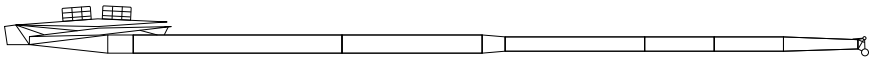

L78m

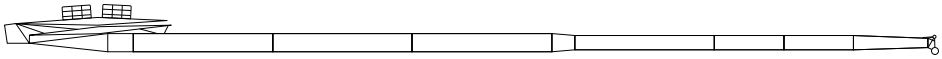

L84m

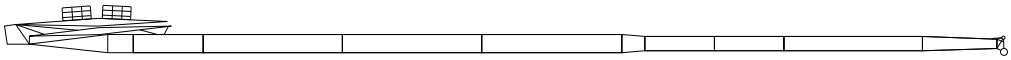

L90m

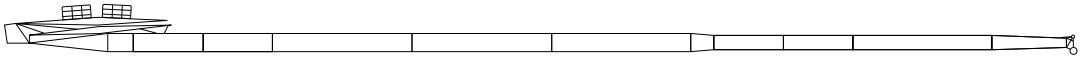

Counterweight Combinations

CW mount tray: 23t
CW blocks: 10t*14
Combinations: 0t, 23t, 43t, 63t, 83t, 103t, 123t, 143t, 163t

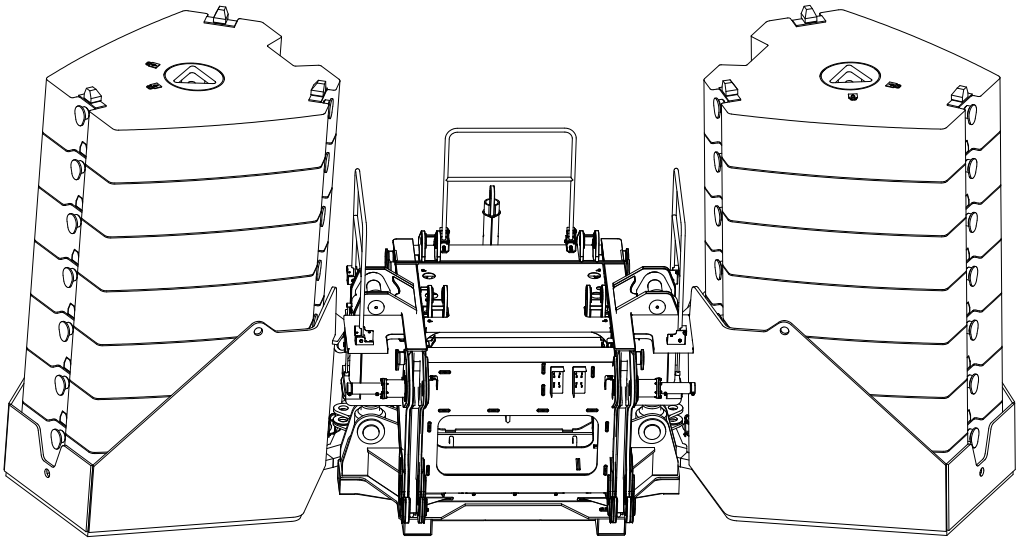

Operating Range - Telescopic Boom

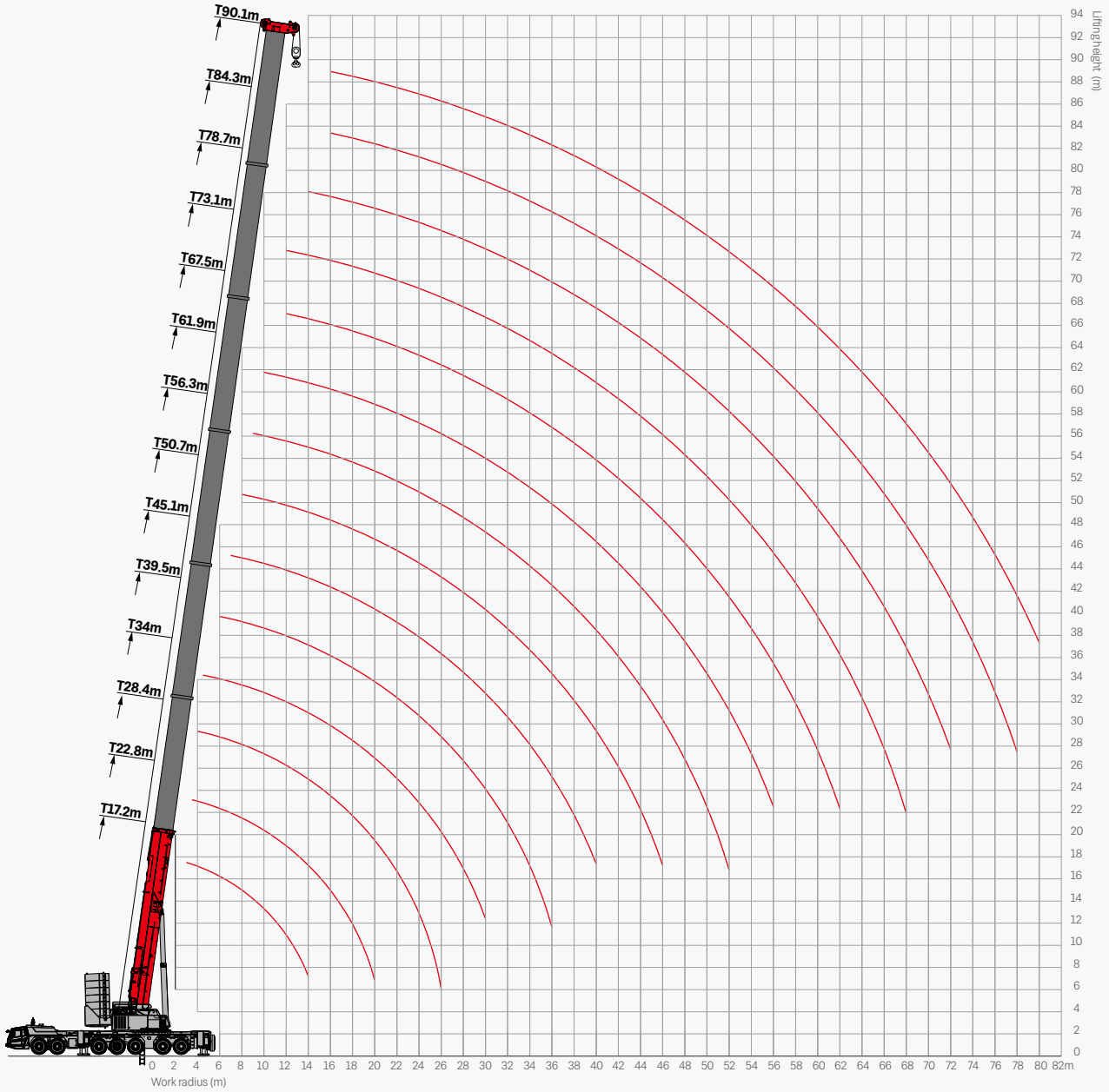

Load Chart - Telescopic Boom

Unit: t

Radius (m)	17.2m **	17.2m	22.8m	28.4m	34m	39.5m	45.1m	50.7m	56.3m	61.9m	67.5m	73.1m	78.7m	84.3m	90.1m	Radius (m)
3	700.0															3
3.5	249.3	249.3*	248.0*													3.5
4	248.3	248.3*	248.0*	244.3*												4
4.5	248.0	248.0*	248.0*	244.3*	200.0											4.5
5	247.6	247.6*	248.0*	244.3*	200.0											5
6	238.9	238.9*	247.8*	244.3*	200.0	200.0										6
7	231.0	231.0*	231.3*	231.0*	200.0	200.0	200.0									7
8	209.8	209.8*	210.2*	209.8*	194.4	200.0	187.9	136.0								8
9	191.8	190.5	190.8	190.6	177.7	179.8	173.2	129.6	106.7							9
10	176.5	175.2	175.6	175.3	163.9	161.8	159.7	123.5	102.1	89.4						10
12	151.7	150.0	150.5	150.2	141.6	134.8	138.0	112.2	90.1	85.0	73.2	59.4				12
14	128.0	120.6	130.6	130.2	129.5	115.6	129.4	101.2	78.1	81.0	69.8	55.0	49.0			14
16			115.0	114.7	113.8	101.8	116.0	94.6	74.2	71.0	67.1	52.8	48.4	38.8	33.2	16
18			99.2	99.7	98.4	90.6	101.7	86.9	69.0	63.1	61.3	50.1	45.4	38.4	32.3	18
20			71.2	87.3	86.1	81.4	90.0	80.3	64.2	57.0	55.5	47.3	42.6	36.3	30.6	20
22				77.0	76.0	73.8	79.2	74.8	59.1	52.0	51.0	44.6	39.9	34.3	28.9	22
24				66.3	67.6	67.4	70.9	68.2	54.3	48.5	47.0	42.3	37.7	32.5	27.5	24
26					60.5	62.2	63.8	61.6	49.0	44.2	43.3	39.7	35.4	30.9	26.2	26
28					54.5	56.0	57.2	55.0	45.1	41.1	39.9	36.9	33.1	29.2	25.0	28
30					44.6	50.4	51.8	50.6	42.2	38.2	37.4	34.6	31.1	27.6	23.6	30
32						45.0	47.2	46.2	39.1	35.5	34.5	32.4	29.6	26.3	22.5	32
34						40.8	43.5	41.8	36.1	33.6	32.4	30.2	27.8	25.1	21.5	34
36						34.7	38.1	38.5	33.0	31.5	30.3	28.3	26.0	23.5	20.5	36
38							35.6	35.2	30.6	30.0	28.0	26.5	24.8	22.4	19.7	38
40							32.4	32.4	28.5	27.7	26.2	24.8	23.3	21.4	19.0	40
42								30.2	26.4	25.2	24.6	23.3	22.2	20.2	18.2	42
44								28.0	24.3	22.9	23.0	22.2	20.8	19.3	17.5	44
46								25.5	22.4	20.8	21.6	20.8	19.8	18.4	16.7	46
48									20.6	19.0	20.3	19.5	18.6	17.2	16.0	48
50									17.5	17.5	19.0	18.3	17.7	16.4	15.2	50
52									15.0	16.2	17.8	17.4	16.6	15.6	14.6	52
54										14.1	16.7	16.1	15.8	14.9	13.4	54
56										12.7	15.6	14.8	14.8	14.2	12.8	56
58											14.7	13.5	14.1	13.3	12.2	58
60											13.8	12.7	13.3	12.9	11.6	60
62												11.9	12.3	12.1	11.1	62
64												11.3	11.2	11.5	10.5	64
66												10.6	10.4	11.0	9.8	66
68													9.8	10.3	8.7	68
70													9.1	9.5	8.0	70
72														8.6	7.3	72
74														7.9	6.7	74
76														7.1	5.9	76
78															5.3	78
80															4.6	80

Remark: ** Load over rear, requiring additional equipment.
* Requiring additional equipment.

Operating Range - Telescopic Boom with Superlift Device

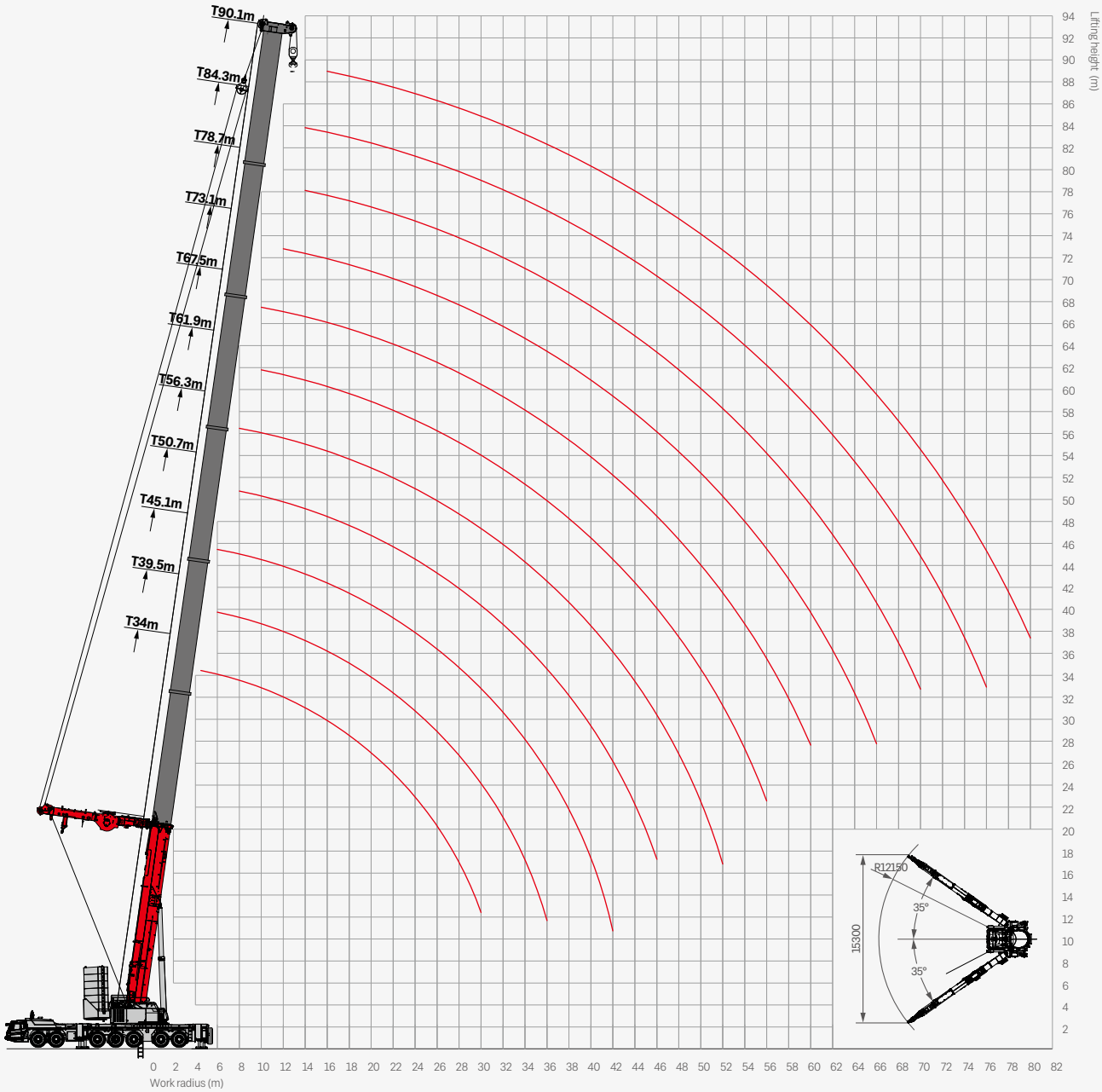

Load Chart - Telescopic Boom with Superlift Device

Unit: t

Radius (m)	34m	39.5m	45.1m	50.7m	56.3m	61.9m	67.5m	73.1m	78.7m	84.3m	90.1m	Radius (m)
3												3
3.5												3.5
4												4
4.5	200.0											4.5
5	200.0	195.0										5
6	200.0	187.2	172.0									6
7	200.0	177.4	165.4	165.7								7
8	188.4	171.8	158.4	160.8	149.7							8
9	172.6	164.5	153.5	155.0	146.1	130.0						9
10	158.1	156.5	148.5	150.0	142.1	125.0	115.5					10
12	134.5	135.2	137.1	136.1	133.2	120.3	110.4	99.0				12
14	115.6	118.0	119.4	118.3	117.5	110.6	102.7	95.1	86.1	74.0		14
16	100.6	105.1	104.6	106.4	102.3	96.1	96.8	89.8	81.9	70.3	58.1	16
18	88.6	93.1	92.5	94.3	93.5	87.5	90.5	86.4	78.0	67.2	55.7	18
20	79.2	83.0	82.5	84.3	83.5	80.6	82.0	80.4	73.7	63.9	53.2	20
22	68.4	74.0	73.3	76.4	74.6	74.0	75.1	72.5	68.3	60.6	50.4	22
24	60.0	65.4	64.7	68.9	66.3	66.3	66.8	66.8	64.0	57.7	47.3	24
26	52.9	58.5	57.9	62.2	59.2	59.3	59.7	59.5	59.9	55.3	45.6	26
28	46.8	52.5	51.9	56.3	55.1	53.4	57.2	54.1	55.1	51.9	43.7	28
30	38.7	47.2	46.6	51.1	49.9	50.0	51.4	50.4	50.3	48.9	42.0	30
32		42.7	42.2	46.6	47.9	46.4	47.0	46.1	45.8	44.6	40.3	32
34		38.6	38.1	42.6	43.9	43.8	43.0	42.5	41.9	42.2	38.0	34
36		29.5	34.6	39.1	40.3	41.1	39.2	40.2	38.3	39.0	36.5	36
38			31.3	35.9	36.6	37.5	36.5	36.8	35.2	36.2	35.4	38
40			28.2	33.1	33.3	33.8	33.5	34.5	32.3	33.2	32.0	40
42			20.0	30.2	30.4	31.2	32.0	31.1	29.7	30.6	30.1	42
44				27.3	27.5	28.7	29.2	29.6	27.4	28.1	27.5	44
46				23.2	24.9	26.2	27.7	27.5	25.3	25.9	26.3	46
48					23.5	24.9	25.6	25.6	23.3	23.8	24.0	48
50					21.1	23.7	23.7	23.8	21.6	22.6	22.0	50
52					18.3	21.7	20.9	21.8	20.0	20.9	20.2	52
54						19.7	19.4	20.5	18.2	19.5	19.0	54
56						16.2	17.5	19.0	16.5	18.0	17.9	56
58							16.0	17.7	14.8	16.4	15.7	58
60							12.2	16.3	13.3	14.9	14.6	60
62								14.9	11.9	13.5	13.4	62
64								10.3	10.5	12.3	12.4	64
66								9.0	9.3	11.1	11.4	66
68									8.1	9.9	10.2	68
70									7.0	8.8	9.2	70
72										6.5	8.2	72
74										5.0	7.3	74
76										3.5	6.0	76
78											5.2	78
80											4.0	80

Operating Range - Telescopic Boom with Heavy-duty Wind Power Jib with Superlift Device

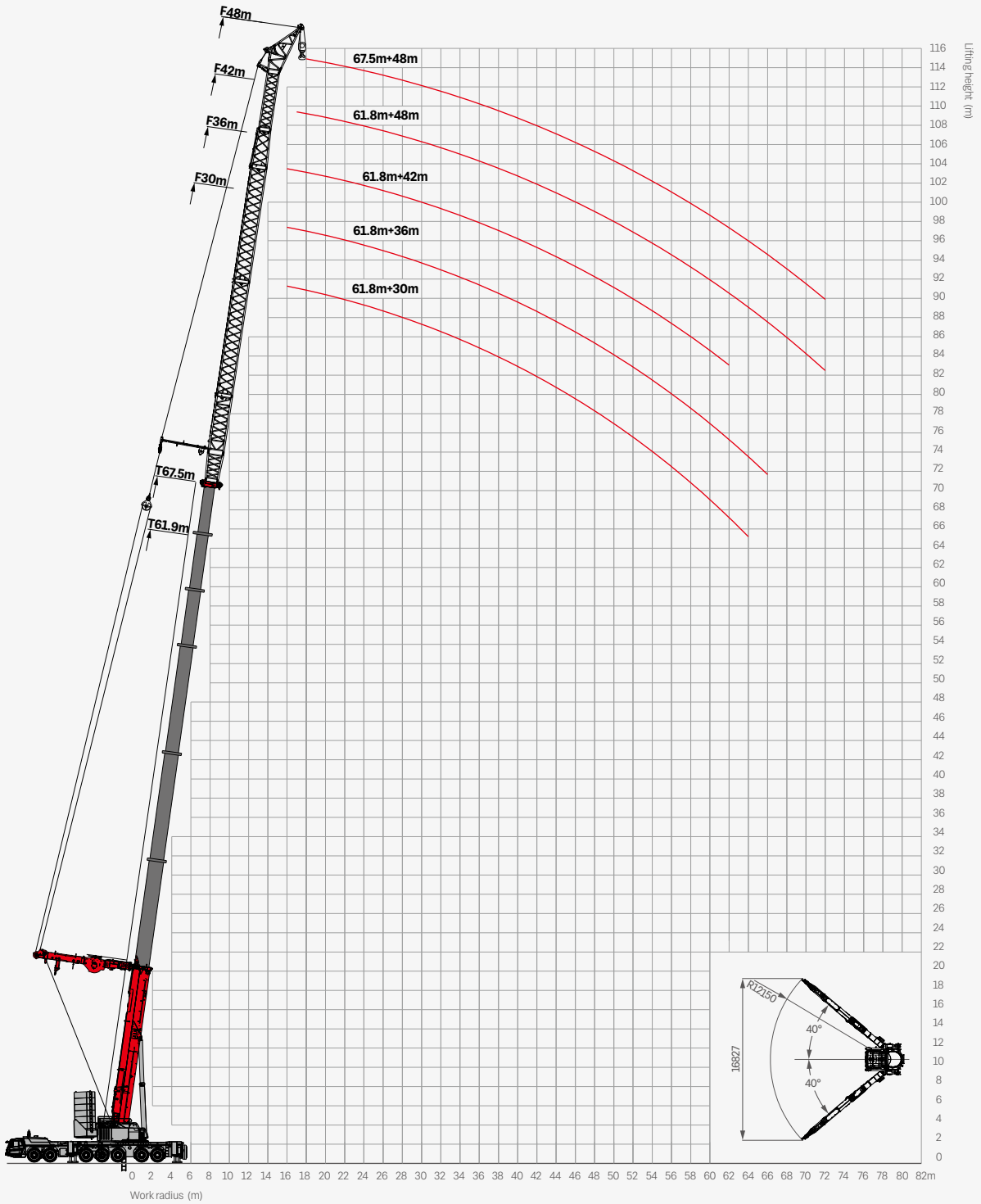

Load Chart - Telescopic Boom with Heavy-duty Wind Power Jib with Superlift Device

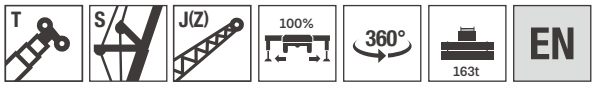

Unit: t

Radius (m)	61.8m				67.5m	Radius (m)
	30m	36m	42m	48m	48m	
16	95.0	85.0	80.0			16
17	80.0	82.0	75.0	75.0		17
18	85.0	79.0	70.0	70.0	65.0	18
20	76.0	73.0	65.0	62.0	58.0	20
22	67.0	65.0	61.0	55.0	53.0	22
24	58.0	59.0	56.0	50.0	49.0	24
26	51.0	54.0	51.0	46.0	45.0	26
28	45.0	48.0	46.0	42.0	42.0	28
30	41.0	43.0	40.5	39.5	39.0	30
32	36.8	38.0	35.6	36.0	36.0	32
34	33.1	33.5	32.4	32.0	32.5	34
36	29.8	29.5	29.0	30.0	30.2	36
38	26.7	25.8	26.0	27.8	28.0	38
40	24.0	23.5	23.4	24.5	24.9	40
42	21.5	21.1	20.8	22.0	22.5	42
44	19.2	19.0	18.5	19.8	20.1	44
46	17.1	17.5	17.0	17.9	18.2	46
48	15.0	16.0	15.1	16.0	16.5	48
50	13.1	14.1	13.2	14.4	15.0	50
52	11.3	12.4	11.8	13.0	13.7	52
54	9.6	11.0	10.2	12.0	12.8	54
56	8.1	9.5	8.8	10.7	11.8	56
58	6.7	8.0	7.2	9.2	10.9	58
60	5.2	6.8	5.9	8.0	9.0	60
62	4.1	5.4	4.5	7.2	8.2	62
64	3.0	4.4		5.9	6.9	64
66		3.5		4.8	5.8	66
68				3.3	4.3	68
70				2.4	3.4	70
72				1.2	2.2	72

Operating Range - Telescopic Boom with Fixed Jib

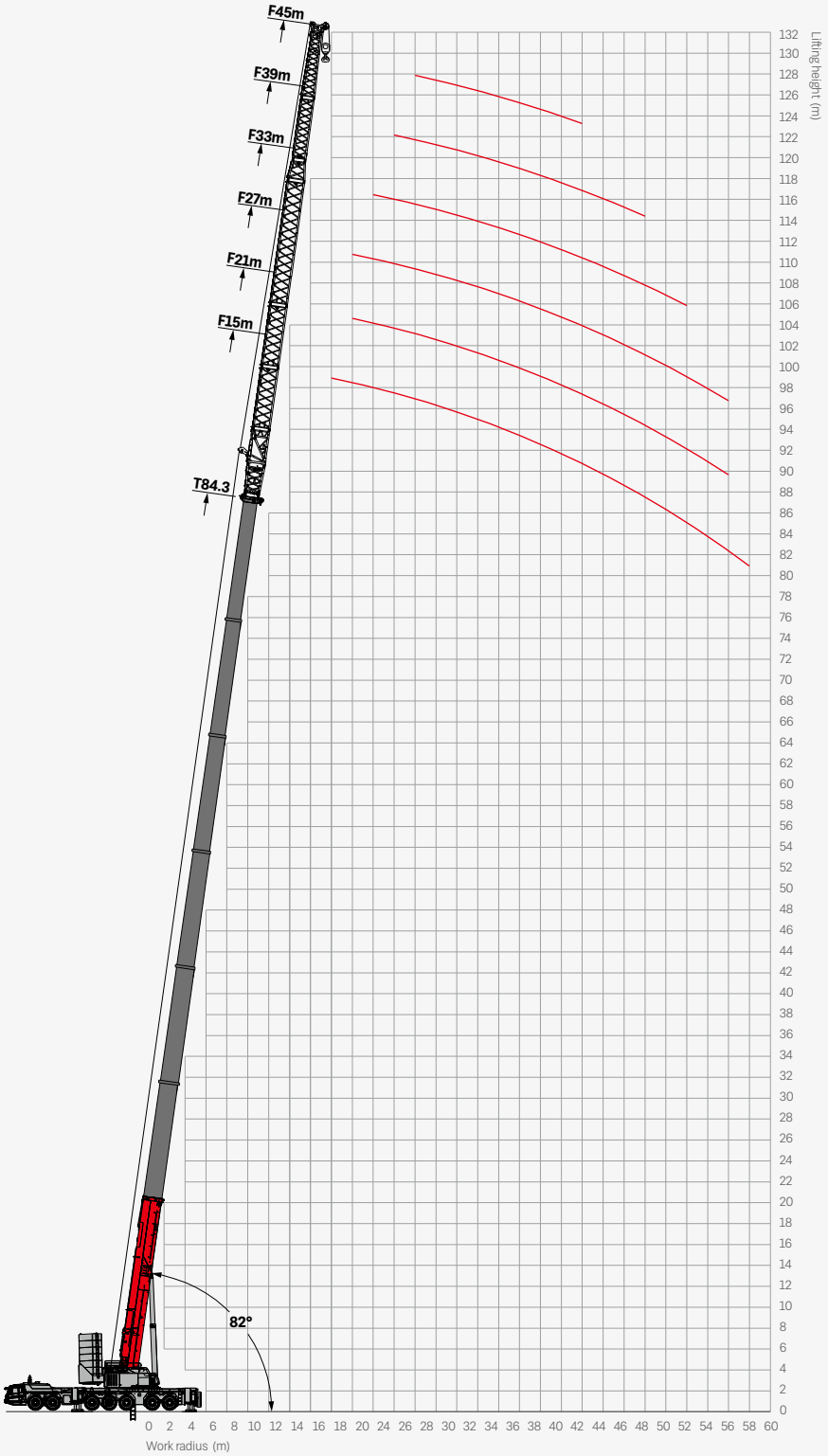

Load Chart - Telescopic Boom with Fixed Jib

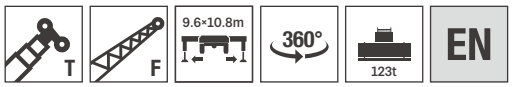

Unit: t

Radius (m)	17.2m						50.7m						Radius (m)
	15m	21m	27m	33m	39m	45m	15m	21m	27m	33m	39m	45m	
5	75.3												5
6	71.5	55.0											6
7	63.8	50.1	54.0	44.5									7
8	57.2	45.1	48.6	41.0	31.5								8
9	50.1	41.3	44.5	37.9	29.1	24.6							9
10	45.1	37.4	40.3	34.7	26.9	22.8							10
12	40.5	32.0	34.5	29.5	23.2	19.8	50.8	37.0	37.5				12
14	35.5	28.2	30.3	26.8	20.7	17.4	46.2	34.0	35.4	28.0	21.2		14
16	30.8	25.0	26.8	23.8	18.1	15.8	42.7	31.4	32.8	26.0	19.4	15.4	16
18	26.8	22.1	23.9	21.2	16.3	13.9	39.8	29.1	30.4	24.1	18.0	14.3	18
20	23.2	19.7	21.2	19.2	14.8	12.5	37.0	27.0	28.2	22.5	16.7	13.2	20
22	20.7	17.4	18.8	17.0	13.4	11.4	34.7	25.2	26.3	20.9	15.7	12.3	22
24	19.0	15.3	16.4	15.3	12.0	10.5	32.7	23.6	24.6	19.6	14.6	11.5	24
26	17.2	13.6	14.5	13.6	10.9	9.6	30.8	22.3	23.3	18.4	13.7	10.8	26
28	15.8	12.4	13.3	12.0	9.8	8.7	28.8	21.1	22.1	17.2	12.8	10.1	28
30		11.4	12.2	10.7	8.7	7.9	26.6	20.0	20.9	16.6	12.1	9.4	30
32		10.5	11.3	9.6	7.7	7.1	24.6	19.1	19.9	15.5	11.4	8.8	32
34		9.7	10.4	8.9	6.7	6.3	22.6	18.0	18.8	14.7	10.8	8.4	34
36			9.7	8.3	6.1	5.7	20.9	17.1	17.8	14.2	10.2	7.9	36
38			9.1	7.5	5.7	4.9	19.1	16.1	16.8	13.3	9.7	7.4	38
40				6.8	5.3	4.5	17.2	15.3	15.9	12.6	9.2	7.1	40
42				6.5	4.9	4.1	15.5	14.3	15.0	11.9	8.8	6.7	42
44				6.1	4.6	3.8	14.0	13.5	14.1	11.1	8.3	6.4	44
46					4.2	3.5	12.8	12.6	13.1	10.5	7.8	6.0	46
48					4.0	3.3	11.7	11.4	11.9	9.8	7.4	5.7	48
50					3.8	3.1	10.7	10.5	11.0	9.2	6.9	5.3	50
52							9.7	9.6	10.0	8.6	6.6	5.1	52
54							8.4	8.8	9.2	8.1	6.1	4.8	54
56							6.8	8.1	8.4	7.7	5.6	4.5	56
58							5.2	6.7	7.6	7.3	5.3	4.2	58
60							3.8	5.3	6.4	7.0	4.9	3.9	60
62								3.9	5.1	6.2	4.8	3.6	62
64								2.7	3.8	4.9	4.6	3.4	64
66									2.5	3.6	3.6	3.3	66
68										2.5	2.4	3.0	68
70												2.3	70
72													72
74													74
76													76
78													78
80													80
82													82
84													84

Load Chart - Telescopic Boom with Fixed Jib

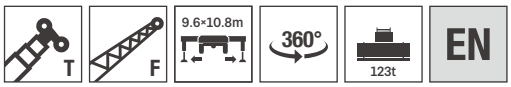

Unit: t

Radius (m)	61.9m						73.1m						Radius (m)
	15m	21m	27m	33m	39m	45m	15m	21m	27m	33m	39m	45m	
5													5
6													6
7													7
8													8
9													9
10													10
12													12
14	37.7	31.0	31.3										14
16	34.7	28.8	29.9	23.2			25.9						16
18	32.0	27.0	28.1	21.8	16.4	13.6	23.9	20.3	21.1	17.4			18
20	29.6	25.5	26.5	21.0	15.5	12.8	22.2	18.9	19.5	16.4	13.8		20
22	27.4	23.8	24.7	19.1	14.6	12.0	20.6	17.6	18.2	15.2	12.9	10.1	22
24	25.3	22.2	23.0	18.1	13.7	11.3	19.1	16.6	17.2	14.2	12.1	9.6	24
26	23.4	20.7	21.4	17.1	13.0	10.7	17.9	15.4	16.0	13.4	11.3	9.2	26
28	21.7	19.3	20.0	16.3	12.3	10.1	16.6	14.4	14.9	12.6	10.7	8.7	28
30	20.2	17.9	18.5	15.4	11.6	9.5	15.3	13.5	13.9	11.7	10.0	8.2	30
32	18.8	16.6	17.2	14.7	11.0	9.1	14.2	12.5	13.0	11.0	9.4	7.8	32
34	17.5	15.4	16.0	13.9	10.4	8.6	13.1	11.5	11.9	10.2	8.9	7.3	34
36	16.2	14.4	14.9	13.1	10.0	8.1	12.2	10.7	11.0	9.4	8.3	7.0	36
38	15.2	13.5	14.0	12.2	9.5	7.7	11.3	9.9	10.2	8.7	7.7	6.5	38
40	14.0	12.5	13.0	11.4	9.0	7.3	10.3	9.1	9.4	7.9	7.0	6.0	40
42	13.0	11.6	12.0	10.6	8.7	7.0	9.6	8.4	8.6	7.2	6.4	5.6	42
44	11.9	10.8	11.2	9.9	8.3	6.6	8.8	7.7	7.9	6.6	5.9	5.1	44
46	10.9	10.0	10.4	9.1	7.9	6.4	8.1	7.0	7.2	6.0	5.4	4.5	46
48	9.9	9.3	9.6	8.4	7.3	6.0	7.4	6.3	6.5	5.5	4.8	4.1	48
50	8.7	8.5	8.8	7.8	6.7	5.8	6.7	5.7	5.9	5.0	4.3	3.7	50
52	7.8	7.7	8.0	7.2	6.2	5.5	6.1	5.1	5.3	4.4	3.9	3.3	52
54	7.1	6.8	7.1	6.7	5.6	5.1	5.5	4.6	4.8	3.9	3.5	2.9	54
56	6.4	6.0	6.3	6.1	5.2	4.6	4.9	4.1	4.2	3.4	3.1	2.4	56
58	5.4	5.3	5.5	5.3	4.7	4.3	4.3	3.6	3.7	3.0	2.7		58
60	4.3	4.8	4.9	4.8	4.2	3.8	3.7	3.1	3.2	2.5			60
62	3.3	4.1	4.3	4.2	3.8	3.5	3.2	2.7	2.8				62
64	2.4	3.2	3.9	3.6	3.3	3.1	2.4	2.3	2.4				64
66		2.3	3.1	3.1	2.8	2.8	1.6						66
68			2.1	2.6	2.4	2.3							68
70													70
72													72
74													74
76													76
78													78
80													80
82													82
84													84

Load Chart - Telescopic Boom with Fixed Jib

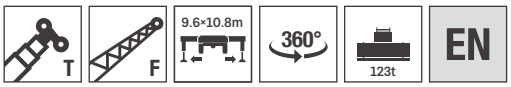

Unit: t

Radius (m)	84.3m						Radius (m)
	15m	21m	27m	33m	39m	45m	
5							5
6							6
7							7
8							8
9							9
10							10
12							12
14							14
16							16
18	17.2						18
20	15.9	13.3	13.9				20
22	14.8	12.4	12.8	10.8			22
24	13.8	11.6	12.0	9.8	8.1		24
26	13.0	10.8	11.1	9.1	7.5	6.0	26
28	12.2	10.1	10.4	8.5	6.9	5.6	28
30	11.5	9.5	9.8	7.9	6.4	5.1	30
32	10.7	8.9	9.2	7.5	6.0	4.8	32
34	10.0	8.4	8.6	7.0	5.5	4.4	34
36	9.0	7.9	8.1	6.5	5.2	4.1	36
38	8.4	7.3	7.5	6.0	4.8	3.7	38
40	7.7	6.6	6.8	5.6	4.3	3.4	40
42	7.0	6.0	6.2	5.1	4.0	3.0	42
44	6.3	5.5	5.6	4.6	3.6		44
46	5.7	5.0	5.1	4.1	3.3		46
48	5.1	4.5	4.7	3.7	2.9		48
50	4.6	3.9	4.1	3.2			50
52	4.1	3.5	3.6	2.7			52
54	3.6	3.1	3.2				54
56	3.1	2.7	2.8				56
58	2.7						58
60							60
62							62
64							64
66							66
68							68
70							70
72							72
74							74
76							76
78							78
80							80
82							82
84							84

Operating Range - Telescopic Boom with Fixed Jib with Superlift Device I

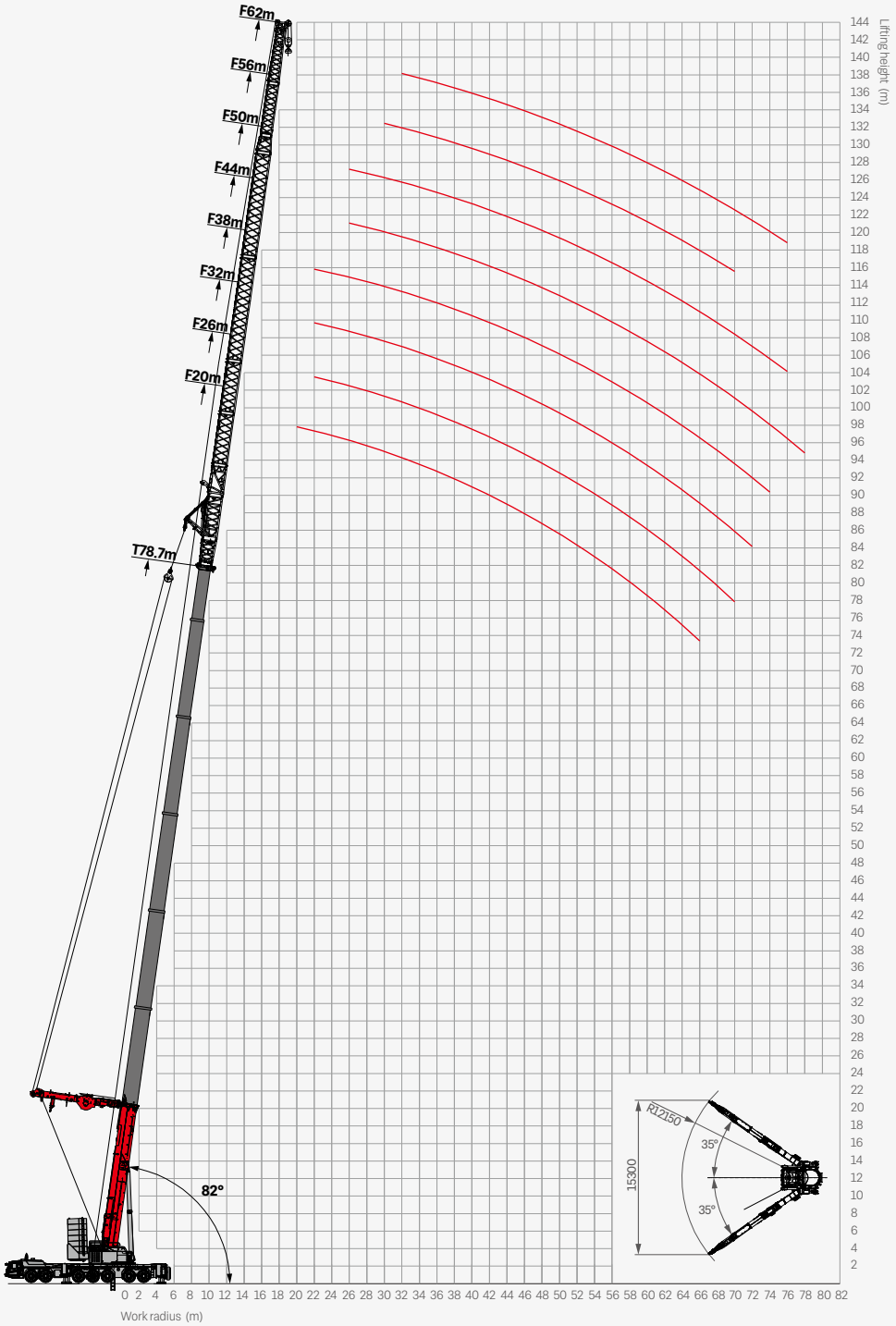

Operating Range - Telescopic Boom with Fixed Jib with Superlift Device I

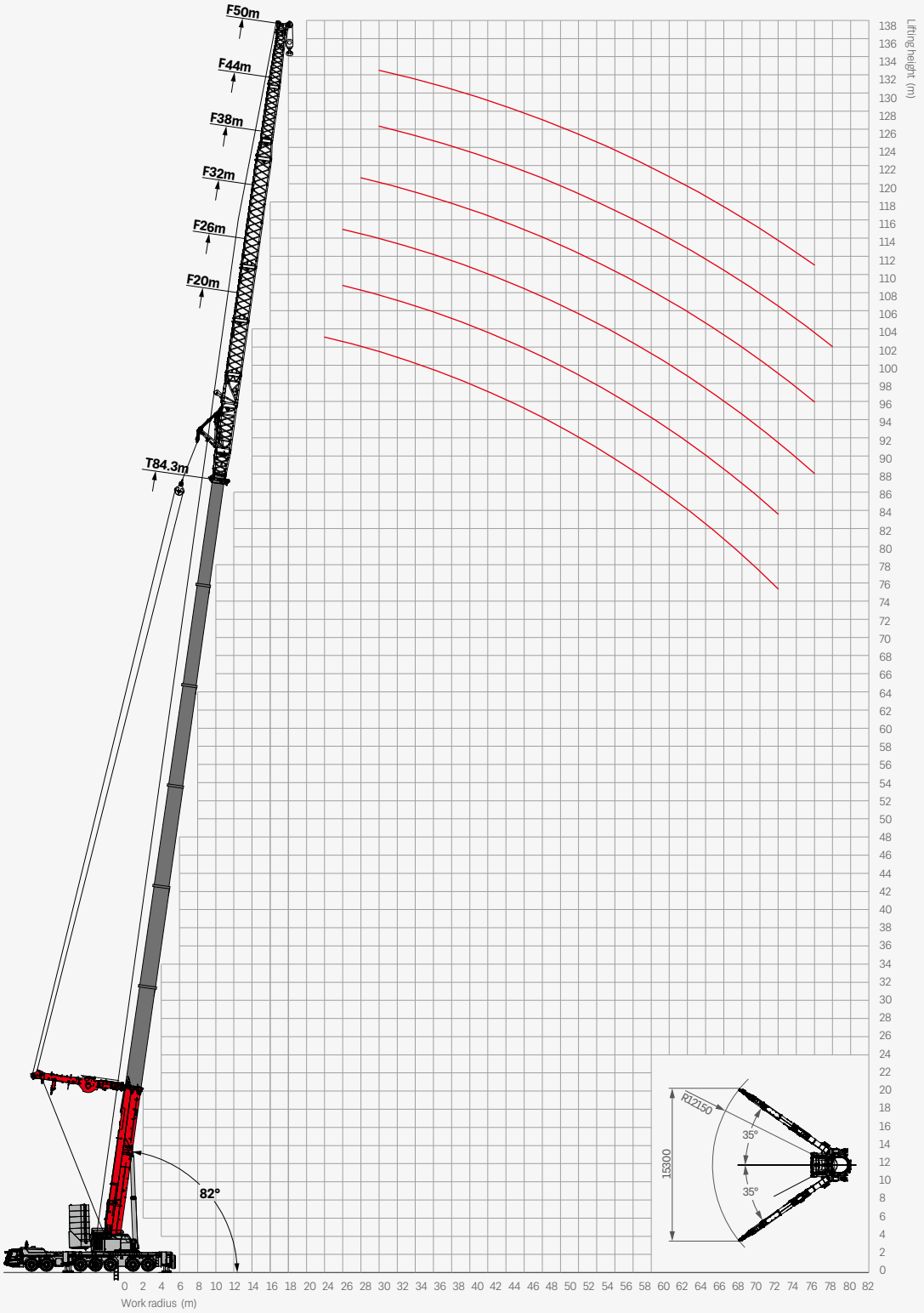

Load Chart - Telescopic Boom with Fixed Jib with Superlift Device I

Unit: t

Radius (m)	50.7m								61.9m								Radius (m)
	20m	26m	32m	38m	44m	50m	56m	62m	20m	26m	32m	38m	44m	50m	56m	62m	
5																	5
6																	6
7																	7
8																	8
9																	9
10	74.0																10
12	71.4	63.3	55.2														12
14	68.2	60.0	51.9	45.2					67.0								14
16	65.2	57.1	49.1	42.2	33.4	28.4			64.0	55.9	47.8	42.1					16
18	62.2	54.2	46.3	39.2	31.3	26.6	24.5		59.0	52.2	45.4	39.7	30.5	25.9			18
20	58.2	51.1	43.9	36.9	29.6	25.1	23.8	21.3	54.0	48.8	43.5	37.9	29.0	24.6			20
22	54.2	48.1	42.0	35.1	27.8	23.6	22.1	21.2	49.7	45.5	41.2	35.6	27.6	23.4	21.8		22
24	49.2	44.7	40.1	33.2	26.4	22.5	20.6	20.8	45.7	42.8	39.8	34.0	26.2	22.2	21.0	18.0	24
26	45.7	42.0	38.3	31.4	25.0	21.3	19.8	20.5	42.8	40.6	38.4	32.6	24.9	21.1	20.0	17.5	26
28	41.7	39.3	36.9	30.1	23.6	20.1	18.9	19.9	39.9	38.2	36.5	31.2	23.9	20.3	19.2	17.2	28
30	38.2	36.8	35.5	28.7	22.7	19.3	18.1	19.3	37.0	36.0	35.1	29.7	22.9	19.5	18.2	17.0	30
32	34.7	34.4	34.0	27.3	21.6	18.4	17.1	18.5	34.5	34.1	33.7	28.6	21.8	18.6	17.4	16.8	32
34	31.7	32.2	32.7	26.0	20.7	17.6	16.1	17.7	30.8	31.2	31.7	27.5	20.9	17.8	16.6	16.6	34
36	29.6	30.6	31.5	24.9	19.6	16.7	15.3	16.8	28.9	29.3	29.7	26.5	20.2	17.2	15.9	16.3	36
38	28.2	28.9	29.6	23.9	18.8	16.0	14.6	16.2	27.7	27.7	27.7	25.4	19.4	16.5	15.2	16.2	38
40	26.2	26.8	27.5	22.9	18.1	15.4	14.0	15.8	25.9	25.7	25.6	24.5	18.7	15.9	14.7	15.5	40
42	24.2	24.8	25.4	21.8	17.3	14.7	13.5	15.2	23.9	23.9	23.8	23.6	17.9	15.2	14.1	15.1	42
44	21.8	22.6	23.4	21.0	16.6	14.1	13.0	14.7	21.5	21.8	22.1	22.8	17.3	14.7	13.6	14.4	44
46	19.9	20.8	21.6	20.3	15.9	13.5	12.5	14.3	19.5	20.0	20.6	21.1	16.7	14.2	13.0	13.3	46
48	17.9	19.0	20.1	19.4	15.3	13.0	12.0	13.6	17.6	18.4	19.2	19.4	16.2	13.8	12.5	12.7	48
50	16.5	17.6	18.6	18.1	14.7	12.5	11.8	13.0	16.2	17.0	17.8	17.5	15.6	13.3	12.0	12.1	50
52	14.3	15.9	17.6	17.2	14.1	12.0	11.5	12.3	14.4	15.4	16.4	16.3	15.1	12.8	11.6	11.6	52
54	13.1	14.7	16.4	16.1	13.4	11.4	11.1	11.7	12.8	14.2	15.2	15.0	14.5	12.3	11.3	10.9	54
56	11.9	13.4	14.8	14.9	12.8	10.9	10.9	11.0	11.1	13.0	13.8	14.0	13.9	11.8	10.8	10.4	56
58	10.4	12.1	13.8	14.3	12.4	10.5	10.5	10.2	9.5	11.8	12.6	13.0	12.7	10.8	10.4	9.5	58
60		11.5	12.7	12.9	12.0	10.2	10.2	10.0	8.0	10.5	11.3	11.8	11.7	9.9	10.1	8.8	60
62		10.8	11.8	12.1	11.5	9.7	10.0	9.9	6.7	9.4	10.2	10.7	11.0	9.4	9.6	8.8	62
64			10.4	11.0	10.4	8.8	9.7	9.6	5.3	8.3	9.1	9.6	10.0	8.9	9.2	8.3	64
66			9.6	10.1	9.5	8.0	9.5	9.2	4.2	7.3	8.1	8.6	9.0	8.4	8.8	8.0	66
68				9.2	8.6	7.3	9.3	8.6	3.1	6.3	7.2	7.7	8.1	7.8	8.4	7.8	68
70				7.4	7.4	6.3	8.8	8.3		5.4	6.2	6.8	7.2	7.2	7.5	7.5	70
72				6.6	6.3	5.3	8.0	8.0		4.4	5.4	5.9	6.3	6.5	6.6	6.9	72
74					5.2	4.4	7.3	7.8			4.5	5.1	5.6	5.7	5.8	6.4	74
76								7.3				4.2	4.7	5.1		5.7	76
78																	78
80																	80
82																	82
84																	84

Load Chart - Telescopic Boom with Fixed Jib with Superlift Device I

Unit: t

Radius (m)	73.1m								78.7m								Radius (m)
	20m	26m	32m	38m	44m	50m	56m	62m	20m	26m	32m	38m	44m	50m	56m	62m	
5																	5
6																	6
7																	7
8																	8
9																	9
10																	10
12																	12
14																	14
16																	16
18	50.5																18
20	48.0	43.4	38.7	34.7					42.9								20
22	45.5	41.4	37.3	33.2	25.8	22.0			40.8	36.9	31.0	27.7					22
24	42.5	39.0	35.5	31.9	24.9	21.2			38.7	35.2	29.9	26.6					24
26	40.5	37.3	34.1	30.8	23.9	20.3	17.0		36.1	33.1	28.4	25.6	20.7	18.0			26
28	37.5	34.9	32.2	29.5	23.1	19.6	16.4	15.3	34.4	31.7	27.3	24.6	19.9	17.3			28
30	35.0	32.9	30.8	28.4	22.3	18.9	15.7	15.1	31.9	29.6	25.8	23.6	19.2	16.7	14.0		30
32	32.5	30.9	29.3	27.5	21.5	18.3	15.0	14.9	29.8	28.0	24.7	22.7	18.5	16.1	13.5	12.2	32
34	30.2	29.1	27.9	26.5	20.9	17.8	14.4	14.9	27.6	26.3	23.5	22.0	17.8	15.6	12.9	12.1	34
36	28.2	27.4	26.6	25.6	20.2	17.1	13.9	14.9	25.7	24.7	22.3	21.2	17.2	15.1	12.4	11.9	36
38	26.3	25.6	25.0	24.6	19.5	16.6	13.4	14.4	24.0	23.3	21.3	20.5	16.7	14.6	11.8	12.0	38
40	25.0	24.3	23.6	23.7	19.0	16.2	12.8	14.0	22.4	21.8	20.0	19.7	16.1	14.1	11.4	11.9	40
42	23.4	23.0	22.5	22.7	18.5	15.7	12.4	13.5	21.3	20.6	18.8	19.0	15.6	13.7	10.9	11.5	42
44	21.5	21.6	21.7	21.8	18.0	15.3	12.0	12.5	19.9	19.5	18.0	18.2	15.2	13.4	10.6	11.2	44
46	19.0	19.5	20.0	20.6	17.5	14.9	11.5	12.0	18.3	18.4	17.4	17.4	14.8	13.0	10.1	10.8	46
48	17.4	17.5	17.6	19.0	17.0	14.5	11.2	11.5	16.2	16.6	16.0	16.5	14.4	12.7	9.7	10.3	48
50	16.0	16.2	16.3	17.4	16.5	14.0	10.7	11.1	14.8	14.9	14.1	15.2	14.0	12.3	9.3	9.9	50
52	14.7	14.9	15.2	16.5	15.9	13.5	10.2	10.5	13.6	13.7	13.0	14.0	13.6	11.9	9.0	9.6	52
54	12.8	13.7	14.1	15.2	15.1	12.8	9.8	10.0	12.5	12.7	12.1	13.2	13.2	11.5	8.6	9.3	54
56	11.1	12.5	13.0	14.0	14.1	12.0	9.2	9.2	11.4	11.7	11.3	12.2	12.7	10.9	8.3	8.8	56
58	9.5	11.3	12.0	12.6	12.9	11.1	8.7	8.6	10.1	10.6	10.4	11.4	12.1	10.2	7.9	8.5	58
60	8.1	10.2	10.9	11.4	11.7	10.3	8.3	8.6	8.6	9.6	9.6	10.9	11.3	9.4	7.6	7.8	60
62	6.8	9.1	9.8	10.2	10.5	9.5	7.8	8.2	7.2	8.7	8.7	10.2	10.4	8.7	7.3	7.3	62
64	5.5	8.1	8.8	9.2	9.5	8.7	6.9	7.9	6.0	7.7	7.8	9.2	9.5	8.0	7.0	7.3	64
66	4.2	7.1	7.8	8.2	8.5	8.0	6.1	7.7	4.8	6.9	7.0	8.0	8.5	7.4	6.5	7.0	66
68	3.1	6.1	6.9	7.3	7.6	7.3	5.3	7.5		6.0	6.3	7.2	7.6	6.8	5.9	6.8	68
70		4.8	6.0	6.4	6.7	6.8	4.5	6.9		5.2	5.6	6.5	6.7	6.2	5.2	6.7	70
72			5.0	5.5	5.8	5.9	3.5	6.5			4.9	5.6	5.9	5.8		6.4	72
74				4.6	5.0	5.0	2.4	5.7				4.7	5.0	5.4		5.6	74
76					4.1	4.2		4.9					4.2	4.6		4.9	76
78					3.3								3.4				78
80																	80
82																	82
84																	84

Load Chart - Telescopic Boom with Fixed Jib with Superlift Device I

Unit: t

Radius (m)	84.3m						Radius (m)
	20m	26m	32m	38m	44m	50m	
5							5
6							6
7							7
8							8
9							9
10							10
12							12
14							14
16							16
18							18
20							20
22	32.2						22
24	30.8	28.6	26.3				24
26	29.6	27.4	25.1	20.1			26
28	28.3	26.2	24.1	19.4	16.2	13.8	28
30	27.3	25.2	23.2	18.6	15.5	13.2	30
32	26.3	24.3	22.3	18.0	14.9	12.7	32
34	25.3	23.4	21.4	17.2	14.2	12.1	34
36	24.3	22.4	20.6	16.6	13.6	11.6	36
38	23.2	21.5	19.8	16.1	13.0	11.1	38
40	22.1	20.6	19.1	15.5	12.6	10.7	40
42	21.0	19.8	18.5	14.9	12.1	10.3	42
44	19.9	18.9	17.9	14.5	11.5	9.8	44
46	18.8	18.0	17.2	14.1	11.1	9.4	46
48	17.7	17.1	16.5	13.5	10.7	9.1	48
50	16.6	16.3	15.9	13.1	10.2	8.7	50
52	15.6	15.3	15.0	12.7	9.9	8.4	52
54	14.1	14.3	14.1	12.3	9.9	8.4	54
56	12.3	13.2	13.0	11.5	9.6	8.1	56
58	10.8	12.2	12.1	10.8	9.3	7.9	58
60	9.3	11.1	11.2	10.2	8.8	7.5	60
62	7.9	9.9	10.1	9.5	8.4	7.2	62
64	6.7	8.9	9.1	9.0	8.0	6.8	64
66	5.5	7.7	8.0	8.4	7.5	6.4	66
68	4.3	6.7	6.9	7.6	7.1	6.1	68
70	3.3	5.8	5.8	6.7	6.7	5.7	70
72	2.3	4.9	4.8	5.9	6.1	5.3	72
74			4.2	5.0	5.3	4.7	74
76			3.7	4.2	4.4	4.2	76
78					3.6		78
80							80
82							82
84							84

Operating Range - Telescopic Boom with Fixed Jib with Superlift Device II

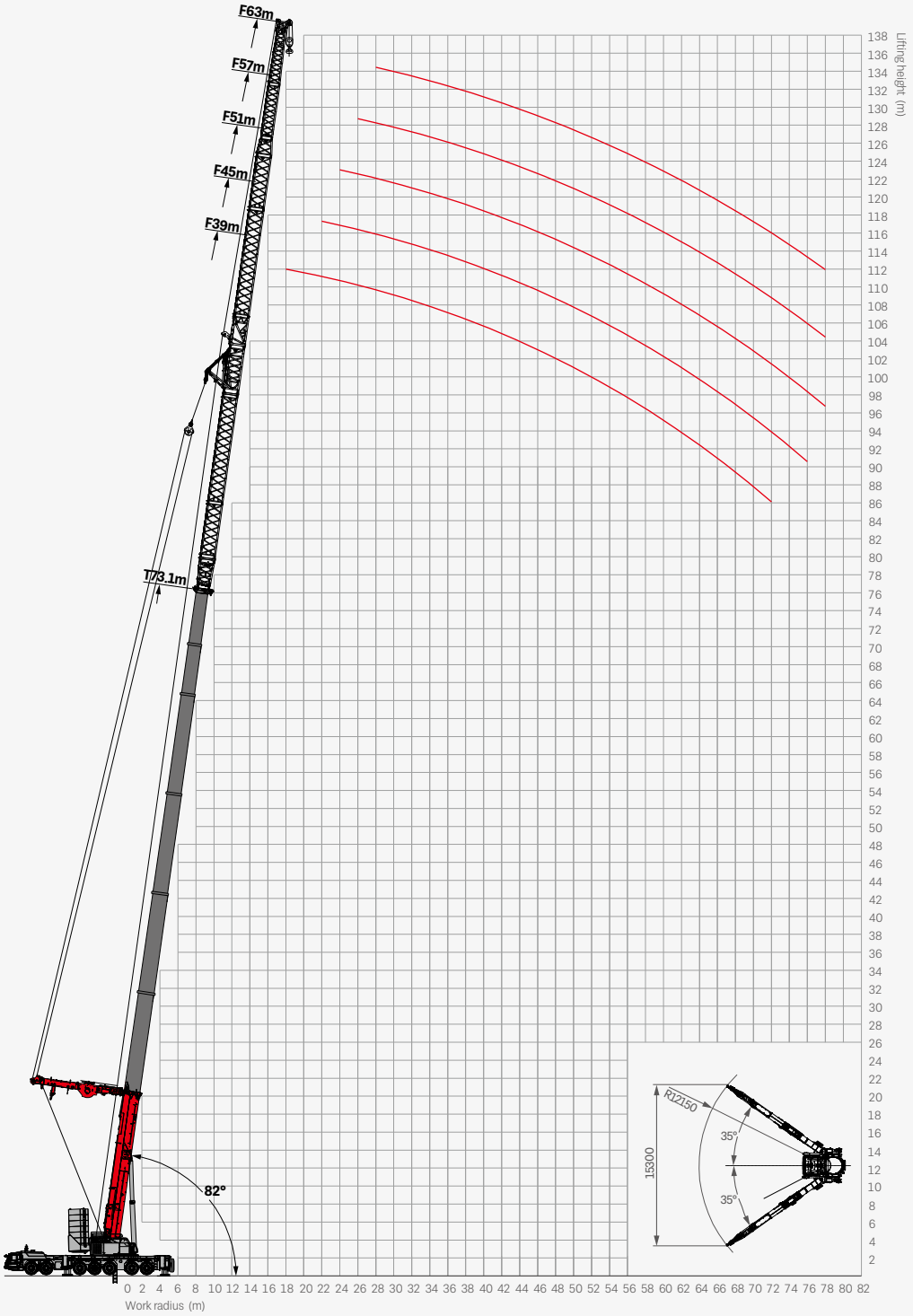

Operating Range - Telescopic Boom with Fixed Jib with Superlift Device II

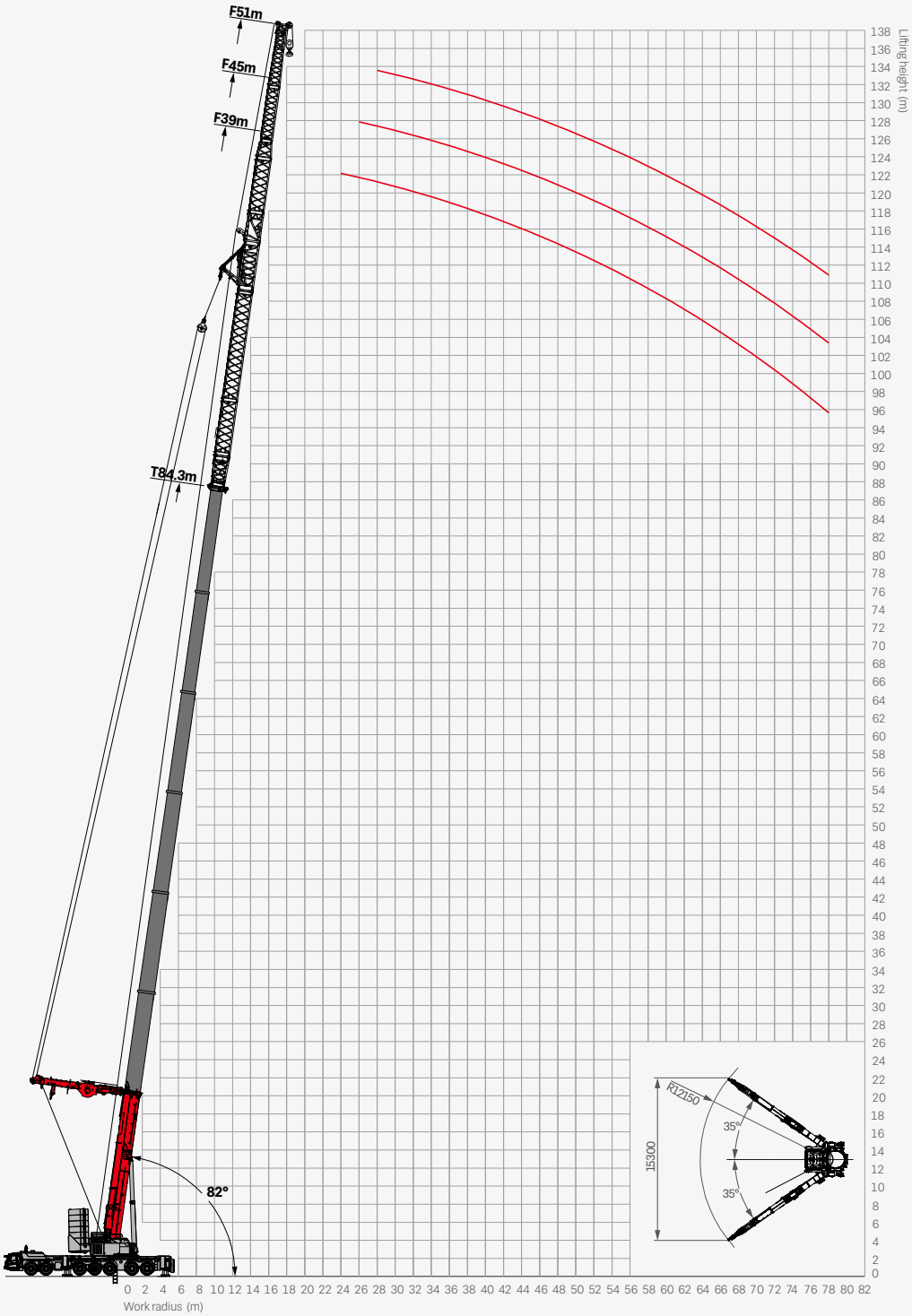

Load Chart - Telescopic Boom with Fixed Jib with Superlift Device II

Unit: t

Radius (m)	50.7m					61.9m					Radius (m)
	39m	45m	51m	57m	63m	39m	45m	51m	57m	63m	
5											5
6											6
7											7
8											8
9											9
10											10
12											12
14	49.1										14
16	47.8	36.8				33.5					16
18	46.0	35.9	34.5	33.1		33.4	27.8				18
20	44.1	35.0	33.7	32.4		33.2	27.2				20
22	41.8	34.0	32.7	31.5	24.3	32.9	26.7	25.5	24.3		22
24	39.5	33.0	31.5	30.0	23.9	32.3	26.0	25.0	23.9		24
26	36.8	31.7	30.1	28.6	23.5	31.7	25.2	24.4	23.6	19.3	26
28	34.7	30.5	28.9	27.3	22.8	31.1	24.2	23.8	23.3	19.1	28
30	32.6	29.3	27.6	26.0	21.8	30.5	23.1	23.1	23.0	18.9	30
32	30.7	27.9	26.3	24.7	21.0	29.7	22.0	22.3	22.6	18.8	32
34	29.2	26.5	25.0	23.4	20.2	28.9	20.8	21.4	22.1	18.6	34
36	27.7	25.1	23.7	22.4	19.4	27.9	19.8	20.6	21.5	18.4	36
38	26.4	23.9	22.6	21.2	18.7	26.8	18.8	19.8	20.7	18.0	38
40	25.2	22.8	21.5	20.3	18.0	25.5	18.0	18.9	19.8	17.6	40
42	24.0	21.9	20.6	19.4	17.4	24.4	17.2	18.0	18.9	17.2	42
44	23.0	20.8	19.6	18.4	16.8	23.2	16.4	17.3	18.2	16.7	44
46	22.0	19.9	18.8	17.6	16.0	21.0	15.7	16.5	17.4	16.1	46
48	21.0	19.1	18.0	16.9	15.3	19.1	15.0	15.8	16.7	15.4	48
50	19.4	18.3	17.3	16.3	14.7	17.3	14.4	15.2	16.0	14.8	50
52	17.8	17.6	16.6	15.6	14.0	15.7	13.8	14.6	15.3	14.2	52
54	16.3	16.7	15.9	14.9	13.5	14.1	13.3	14.0	14.7	13.6	54
56	14.9	15.3	15.3	14.3	12.9	12.8	12.8	13.5	14.0	13.1	56
58	13.5	14.0	14.6	13.8	12.4	11.4	11.8	12.4	12.7	12.5	58
60	12.3	12.8	13.3	13.2	11.9	10.2	10.7	11.2	11.4	11.7	60
62	11.2	11.6	12.2	12.5	11.4	9.0	9.5	10.0	10.3	10.6	62
64	10.1	10.5	11.1	11.4	11.0	7.9	8.4	9.0	9.2	9.5	64
66	9.0	9.5	10.1	10.4	10.5	7.0	7.4	8.0	8.2	8.5	66
68	8.1	8.6	9.2	9.4	9.7	6.0	6.5	7.0	7.3	7.6	68
70	7.2	7.7	8.2	8.5	8.9	5.1	5.6	6.1	6.4	6.6	70
72	6.4	6.9	7.4	7.7	7.9	4.1	4.7	5.3	5.5	5.8	72
74	5.5	6.0	6.6	6.9	7.1	3.2	3.8	4.4	4.8	5.0	74
76		5.3	5.9	6.1	6.4		2.9	3.6	3.9	4.3	76
78			5.1	5.4	5.7			2.7	3.1	3.4	78
80					5.0					2.7	80
82											82
84											84

Load Chart - Telescopic Boom with Fixed Jib with Superlift Device II

Unit: t

Radius (m)	73.1m					78.7m				84.3m			Radius (m)
	39m	45m	51m	57m	63m	39m	45m	51m	57m	39m	45m	51m	
5													5
6													6
7													7
8													8
9													9
10													10
12													12
14													14
16													16
18	24.8												18
20	24.7					19.8							20
22	24.6	21.1				19.8							22
24	24.5	21.0	19.0			19.7	16.7			16.3			24
26	24.3	21.0	18.8	16.5		19.6	16.7	15.3		16.2	13.3		26
28	24.1	20.9	18.7	16.5	13.8	19.5	16.6	15.1	13.2	16.2	13.3	12.0	28
30	23.9	20.7	18.5	16.4	13.7	19.4	16.5	14.9	13.2	16.1	13.2	11.9	30
32	23.7	20.5	18.4	16.4	13.7	19.2	16.4	14.8	13.1	16.0	13.2	11.8	32
34	23.5	20.3	18.3	16.3	13.6	19.0	16.2	14.6	13.1	15.9	13.0	11.7	34
36	23.3	20.1	18.1	16.1	13.5	18.8	16.0	14.5	13.0	15.7	12.9	11.6	36
38	23.1	19.9	17.9	15.9	13.3	18.6	15.9	14.4	13.0	15.4	12.7	11.5	38
40	22.8	19.8	17.8	15.8	13.1	18.5	15.7	14.3	12.8	15.2	12.6	11.4	40
42	22.5	19.6	17.6	15.6	13.0	18.2	15.4	14.0	12.7	14.9	12.4	11.3	42
44	22.1	19.4	17.4	15.4	12.8	17.9	15.1	13.8	12.5	14.6	12.2	11.1	44
46	20.6	19.2	17.2	15.3	12.7	17.4	14.9	13.6	12.2	14.2	12.1	11.0	46
48	18.7	18.9	17.0	15.1	12.4	16.9	14.6	13.3	12.0	13.8	11.9	10.8	48
50	16.9	17.2	16.7	14.9	12.2	16.3	14.3	13.0	11.7	13.2	11.8	10.7	50
52	15.3	15.6	16.1	14.8	11.9	15.4	14.1	12.8	11.5	12.6	11.6	10.5	52
54	13.7	14.1	14.5	14.4	11.6	13.8	13.7	12.4	11.2	12.1	11.5	10.4	54
56	12.3	12.7	13.1	13.4	11.4	12.4	12.7	12.1	11.0	11.6	11.3	10.2	56
58	11.0	11.3	11.8	12.0	11.1	11.1	11.4	11.7	10.7	11.1	11.2	10.1	58
60	9.8	10.1	10.6	10.8	10.9	9.9	10.2	10.6	10.5	10.1	10.4	9.9	60
62	8.6	9.0	9.4	9.6	9.8	8.8	9.1	9.4	9.6	9.0	9.2	9.6	62
64	7.6	7.9	8.3	8.5	8.8	7.7	7.9	8.3	8.5	7.9	8.2	8.5	64
66	6.6	6.9	7.4	7.6	7.7	6.7	7.0	7.4	7.5	6.9	7.2	7.6	66
68	5.6	5.9	6.5	6.6	6.8	5.7	6.0	6.5	6.6	6.0	6.2	6.6	68
70	4.6	5.0	5.5	5.7	5.9	4.8	5.1	5.5	5.7	5.1	5.4	5.7	70
72	3.7	4.1	4.6	4.8	5.1	3.8	4.1	4.7	4.8	4.1	4.4	4.8	72
74		3.2	3.7	4.0	4.3	2.9	3.2	3.7	4.0	3.2	3.5	3.9	74
76		2.3	2.9	3.2	3.4		2.4	2.9	3.1	2.3	2.6	3.1	76
78			2.0	2.3	2.6		1.5	2.0	2.3	1.5	1.8	2.2	78
80													80
82													82
84													84

Operating Range - Telescopic Boom with Luffing Jib with Superlift Device

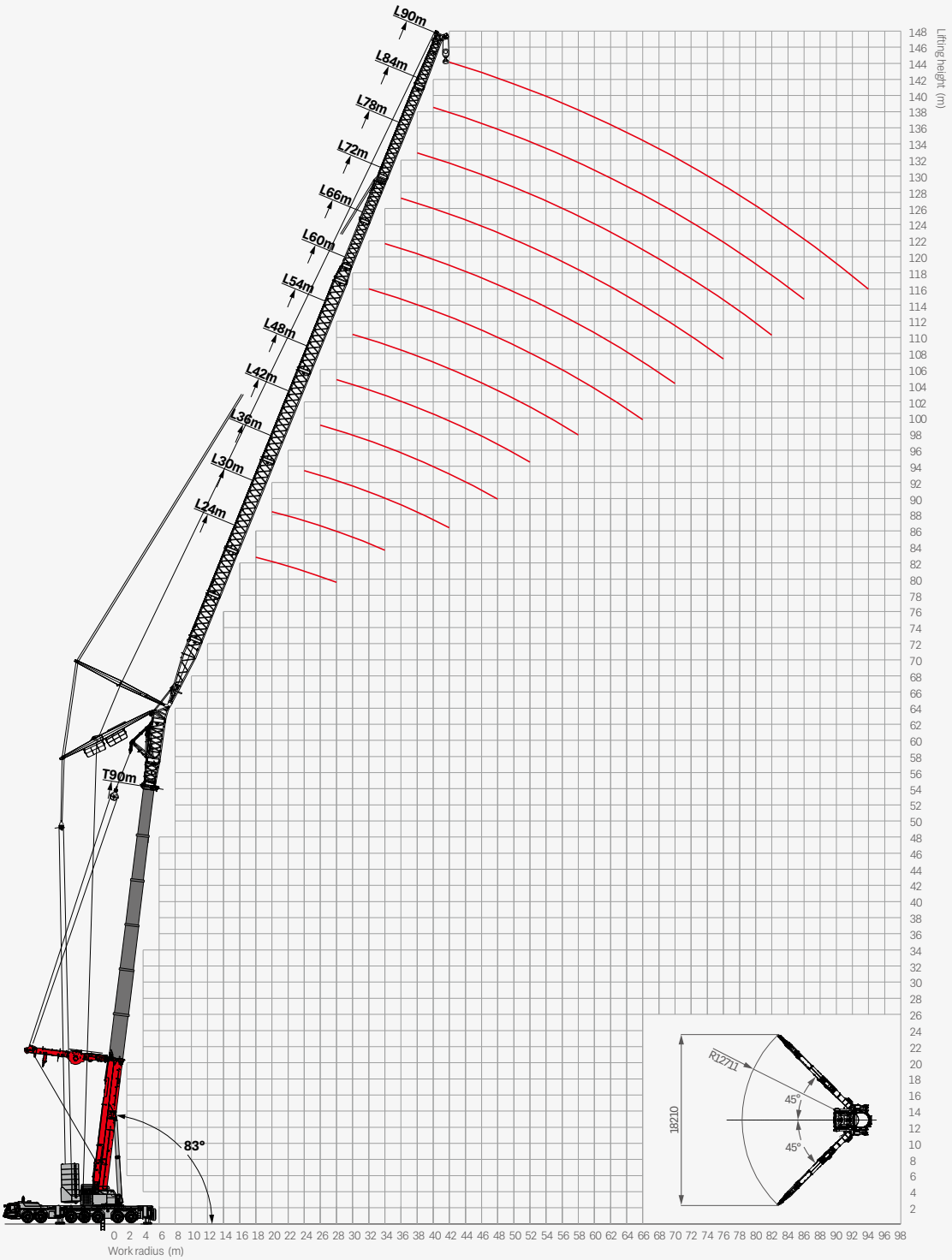

Operating Range - Telescopic Boom with Luffing Jib with Superlift Device

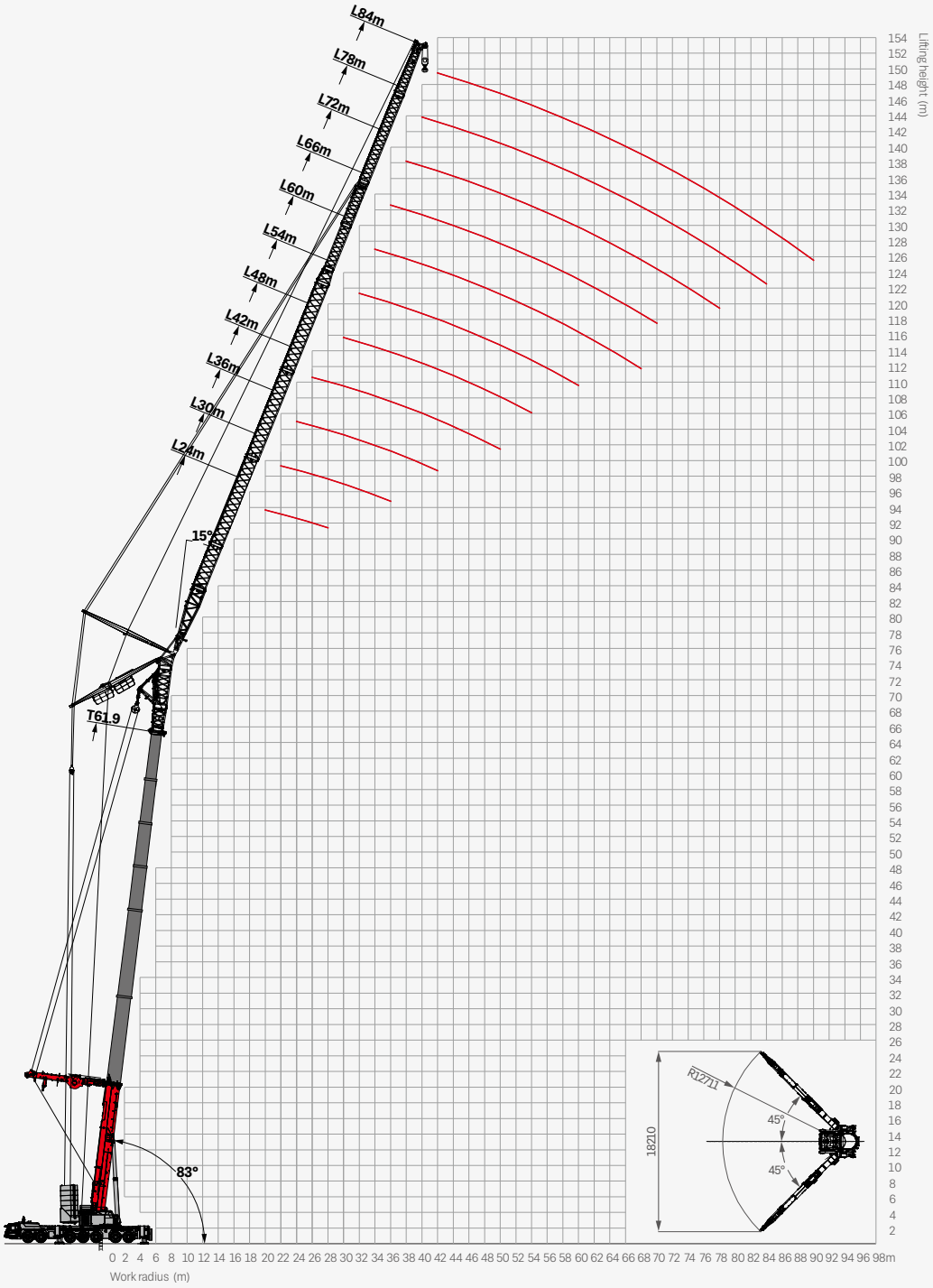

Load Chart - Telescopic Boom with Luffing Jib with Superlift Device

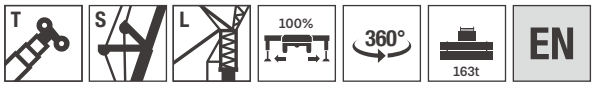

Unit: t

Radius (m)	39.5m												Radius (m)
	24m	30m	36m	42m	48m	54m	60m	66m	72m	78m	84m	90m	
16	95.8												16
18	95.2	90.7											18
20	87.0	84.6	79.8										20
22	80.0	79.5	75.0	67.7									22
24	74.1	73.5	70.2	65.3	54.1								24
26	68.9	68.4	66.6	62.9	52.9	42.6							26
28		63.9	63.0	60.5	51.8	42.0	34.5						28
30		59.8	58.8	56.9	51.2	40.8	34.2	35.8					30
32		56.0	55.3	53.4	50.0	40.3	33.8	35.5	28.3				32
34			51.7	49.9	48.3	39.7	33.4	35.0	27.3	23.7			34
36			48.7	47.0	46.0	39.1	33.0	34.6	26.5	23.3	18.1		36
38			45.7	44.1	43.1	38.5	32.7	34.3	25.8	23.0	17.6	15.3	38
40				41.7	40.3	37.4	32.4	34.0	25.1	22.6	17.0	15.2	40
42				39.4	38.5	36.8	32.1	33.6	24.3	22.0	16.6	14.7	42
44				37.1	36.2	35.7	31.7	33.3	23.6	21.6	16.1	14.3	44
46				34.5	34.3	33.8	31.4	32.9	22.9	21.1	15.6	13.9	46
48					32.5	32.1	31.2	32.7	22.2	20.7	15.3	13.6	48
50					31.1	30.6	30.0	31.4	21.6	20.2	14.8	13.2	50
52						29.1	28.5	29.8	21.1	19.9	14.5	12.9	52
54						27.7	27.1	28.5	20.6	19.4	14.1	12.5	54
56						26.5	25.9	27.1	20.3	19.1	13.7	12.3	56
58							24.7	25.9	19.8	18.7	13.3	12.0	58
60							23.7	24.7	19.4	18.4	13.1	11.6	60
62							22.7	23.7	19.0	18.0	12.8	11.4	62
64							21.7	22.8	18.6	17.8	12.5	11.2	64
66								21.0	18.4	17.4	12.3	10.9	66
68								17.5	18.1	17.2	12.0	10.7	68
70									17.9	16.9	11.7	10.6	70
72									17.4	16.6	11.5	10.4	72
74									17.0	16.5	11.3	10.2	74
76										16.2	11.0	10.0	76
78										15.5	10.9	9.9	78
80										13.4	10.7	9.7	80
82											10.6	9.5	82
84											10.5	9.4	84
86											10.5	9.3	86
88												9.2	88
90												9.1	90
92												9.1	92
94													94

Remark: load capacities subject to change due to product modification.

Load Chart - Telescopic Boom with Luffing Jib with Superlift Device

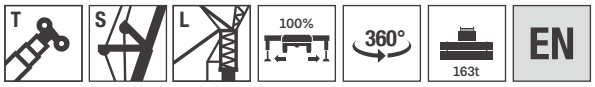

Unit: t

Radius (m)	50.7m												Radius (m)
	24m	30m	36m	42m	48m	54m	60m	66m	72m	78m	84m	90m	
16													16
18	91.9												18
20	84.5	77.3											20
22	78.2	73.6	65.6										22
24	72.3	68.8	62.0	55.0									24
26	67.2	63.9	59.6	52.6	46.0								26
28	62.8	60.8	56.6	50.8	44.9	36.2							28
30		57.8	53.0	49.0	43.1	36.2	29.1						30
32		54.7	50.6	47.2	42.0	36.2	29.1	30.5					32
34		51.7	48.2	44.8	40.8	36.2	29.1	30.5	25.2				34
36			45.8	42.4	39.7	35.7	29.1	30.5	25.2	19.2			36
38			43.4	40.7	38.0	34.5	29.1	30.5	25.2	19.1	15.0		38
40			41.0	39.5	36.2	33.7	29.0	30.4	25.2	19.1	15.0	11.4	40
42			39.1	37.2	35.1	32.9	28.6	30.0	24.8	19.1	15.0	11.4	42
44				35.4	33.9	31.7	28.2	29.6	24.1	19.1	15.0	11.4	44
46				33.3	32.2	30.7	27.8	29.2	23.5	19.1	14.7	11.4	46
48				31.7	30.6	29.8	26.9	28.2	22.8	19.1	14.4	11.4	48
50					29.1	28.5	25.9	27.1	22.3	19.1	14.1	11.4	50
52					27.7	27.1	25.0	26.2	21.7	19.1	13.8	11.4	52
54						25.9	24.0	25.2	21.3	18.9	13.6	11.4	54
56						24.7	23.1	24.2	20.9	18.5	13.3	11.4	56
58						23.6	22.2	23.3	20.6	18.2	13.1	11.4	58
60							21.4	22.4	20.2	17.9	12.8	11.4	60
62							20.6	21.6	19.8	17.6	12.5	11.4	62
64							19.9	20.9	19.1	16.9	12.3	11.3	64
66							19.2	20.1	18.4	16.3	12.1	11.2	66
68								19.4	17.8	15.7	11.8	10.9	68
70								18.5	17.2	15.1	11.6	10.7	70
72									16.7	14.5	11.4	10.5	72
74									16.4	14.0	11.2	10.0	74
76									16.2	13.6	10.9	9.5	76
78										13.2	10.8	9.2	78
80										13.0	10.6	8.7	80
82										12.7	10.5	8.4	82
84											10.1	7.9	84
86											9.9	7.6	86
88												7.4	88
90												7.0	90
92												6.8	92
94												6.6	94

Remark: load capacities subject to change due to product modification.

Load Chart - Telescopic Boom with Luffing Jib with Superlift Device

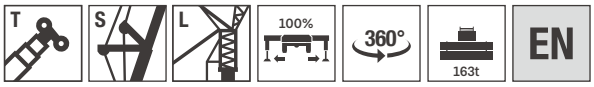

Unit: t

Radius (m)	61.9m											Radius (m)
	24m	30m	36m	42m	48m	54m	60m	66m	72m	78m	84m	
16												16
18												18
20	67.6											20
22	63.3	61.2										22
24	59.6	58.0	50.8									24
26	55.9	54.2	48.4	42.2								26
28	52.2	51.0	46.0	40.4								28
30		48.4	43.5	39.2	39.4							30
32		45.2	41.1	37.4	38.4	30.8						32
34		42.6	38.7	36.2	36.9	30.8	23.9	24.3				34
36		39.8	36.9	34.6	35.7	30.7	23.9	24.0	20.9			36
38			35.0	33.3	34.5	30.2	24.0	23.7	20.6	14.3		38
40			33.1	31.8	33.3	29.4	24.0	23.4	20.0	14.1	10.2	40
42			31.1	30.1	32.2	28.4	24.0	22.6	19.5	13.9	10.0	42
44				28.7	31.0	27.6	24.0	21.7	18.9	13.6	9.8	44
46				27.3	29.5	26.8	24.0	20.9	18.5	13.4	9.6	46
48				25.7	28.1	26.0	23.3	20.2	18.0	13.2	9.4	48
50				24.2	26.9	25.1	22.5	19.4	17.7	12.6	9.2	50
52					25.7	24.2	21.5	18.6	17.4	12.2	9.1	52
54					24.7	23.1	20.6	17.9	17.1	11.8	8.9	54
56						22.2	19.7	17.3	16.8	11.3	8.7	56
58						21.3	18.9	16.7	16.4	10.9	8.5	58
60						20.3	18.1	16.1	15.8	10.5	8.4	60
62							17.3	15.5	15.3	10.2	8.2	62
64							16.4	14.8	14.8	9.9	7.6	64
66							15.7	14.0	14.3	9.4	7.1	66
68							15.2	13.4	13.9	8.9	6.8	68
70								12.5	13.2	8.4	6.4	70
72									12.7	8.0	6.1	72
74									12.3	7.5	5.8	74
76									11.9	7.0	5.4	76
78									11.1	6.7	5.1	78
80										6.3	4.7	80
82										6.1	4.5	82
84										5.9	4.3	84
86											4.0	86
88											3.8	88
90											3.7	90
92												92
94												94

Remark: load capacities subject to change due to product modification.

Load Chart - Telescopic Boom with Luffing Jib with Superlift Device

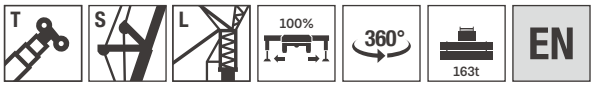

Unit: t

Radius(m)	73.1m							Radius(m)
	24m	30m	36m	42m	48m	54m	60m	
16								16
18								18
20								20
22	50.3							22
24	47.9	46.8						24
26	44.8	44.7	37.4					26
28	42.4	42.1	35.5					28
30	38.0	40.0	33.8	33.0				30
32		38.0	32.2	31.4	30.1			32
34		36.2	30.6	30.1	29.0	22.2		34
36		34.5	29.3	28.8	27.9	22.5	17.0	36
38			28.0	27.5	26.7	22.7	17.4	38
40			27.0	26.3	25.8	22.1	17.4	40
42			25.8	25.3	24.7	21.3	17.4	42
44			24.9	24.5	23.8	20.5	17.4	44
46				23.5	22.8	19.7	16.9	46
48				22.6	22.0	18.9	16.0	48
50				21.8	21.3	18.1	15.1	50
52					20.6	17.1	14.2	52
54					19.9	16.3	13.3	54
56						15.6	12.6	56
58						14.8	11.8	58
60						14.0	11.3	60
62							10.6	62
64							10.0	64
66							9.3	66
68							9.0	68
70								70
72								72
74								74
76								76
78								78
80								80
82								82
84								84
86								86
88								88
90								90
92								92
94								94

Remark: load capacities subject to change due to product modification.

SANY GROUP CRANE BU

SANY Mobile Crane Industrial Park, No.168 Jinzhou Avenue, Jinzhou Development Zone, Changsha City, Hunan Province, P.R. China Zip 410600
Consulting sanycrane@sanygroup.com (Crane BU) / crd@sany.com.cn (IHQ)
After-sales Service 0086-400 6098 318

Reminder:
Any change in the technical parameters and configuration due to product modification or upgrade may occur without prior notice. The machine in the picture may include additional equipment. This brochure is for reference only, and goods in kind shall prevail.
Copyright at SANY. No part of this brochure may be copied or used for any purpose without written approval from SANY.

© Edited in April 2022

SANY CRANE

crane.sanyglobal.com